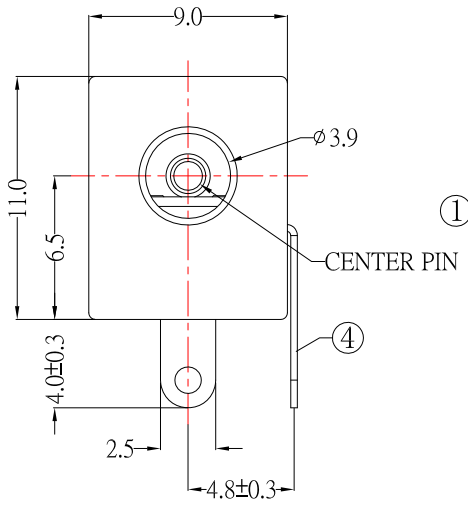

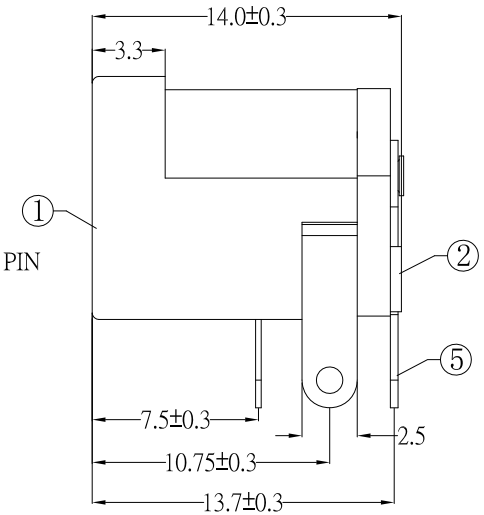

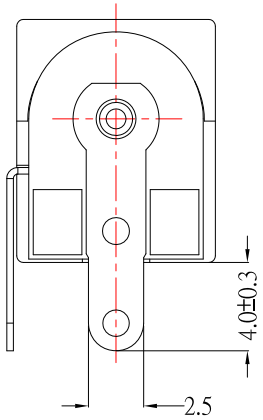

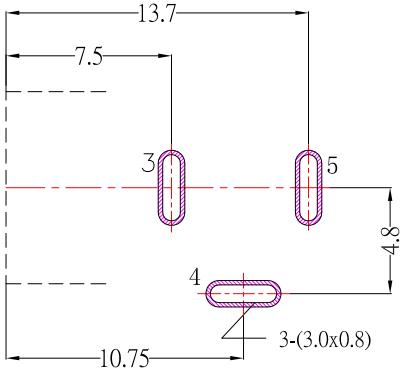

P.C.B LAYOUT
TOP VIEW

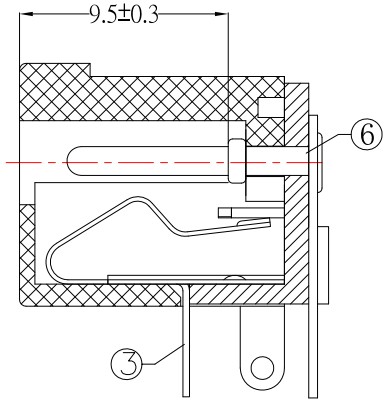

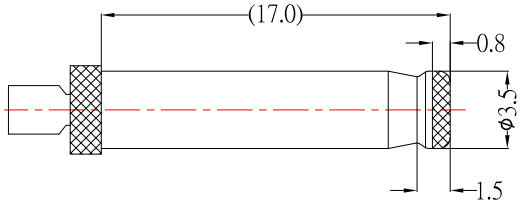

RECOMMENDED PLUG

SPECIFICATION

1.Rating ：DC 16V , 3.0A；
2.Contact resistance：≤30mΩ；
3.Insulation resistance：≥100MΩ；
4.Withstand voltage：500VAC ；
5.Insertion and extraction force：3-30N;
6.life test：5,000 cycles。

MODEL NO.	DC-014-1-x-S124
SCHEMATIC	5/6 (+) 4 3 (−)
CENTER PIN	Ø1.0mm
	Ø1.3mm

NO.	DESCRIPTION	QTY	MATERIAL	PLATING
6	PIN	1	BRASS	Ni-Plating
5	FLAT FOOT	1	BRASS	Ag-Plating
4	CURVE PIECE	1	BRASS	Ag-Plating
3	SPRING PIECE	1	PHOSPHOR BRONZE	Ag-Plating
2	COVER	1	PBT	
1	HOUSING	1	PBT	

ITEM NO.	DESCRIPTION	DRAWN	DATE
6	更新SPEC和材質鍍層	Jack	050423
5	更新圖面尺寸	Jack	042222
4	更新Rating和PCB LAYOUT孔位樣式	Jack	111621
3	更新圖面	Jack	110320
2	更新PCB LAYOUT尺寸及新增PLUG圖	Jack	020618
1	更新為A0版	Jack	051717

CONTACT 建倚科技股份有限公司
CONTACT TECHNOLOGY CORP.

TOLERANCE UNLESS OTHERWISE STATED : Up to 5 ±0.2; Above 5 ~ 15 ±0.3; Above 15 ~ 30 ±0.4; Above 30 ~ 50 ±0.5; Angle ±0.3°

3RD. ANGEL'S | UNITS MM

DRAWN BY: Jack Lu	DATE 05/04/23	MAT'L		TITLE	JACK
CHECKED BY: Jacky Chen	DATE 05/04/23	FINISH		MODLE	DC JACK DIP TYPE
APPROVED BY: Tony Kao	DATE 05/04/23	SCALE	1 : 1	DWG NO.	DC-014-1-x-S124
		SHEET NO.	1 of 1	PART NO.	DC-014-1-x-S124

SIZE A4 | VER R6