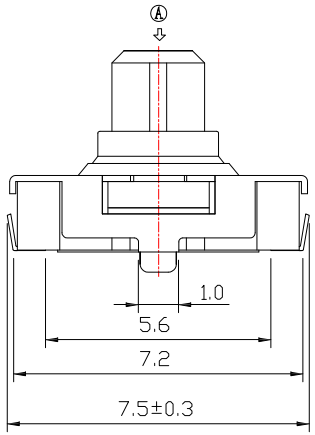

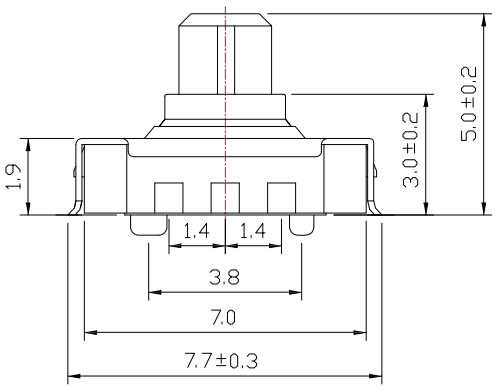

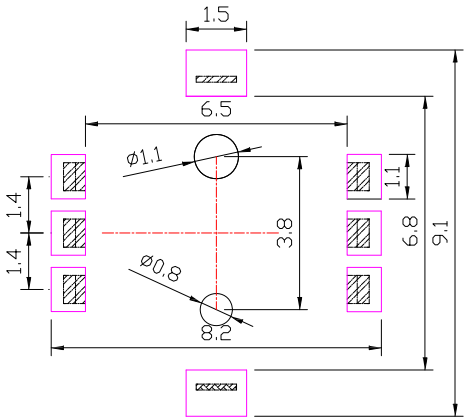

P.C.B LAND PATTERN

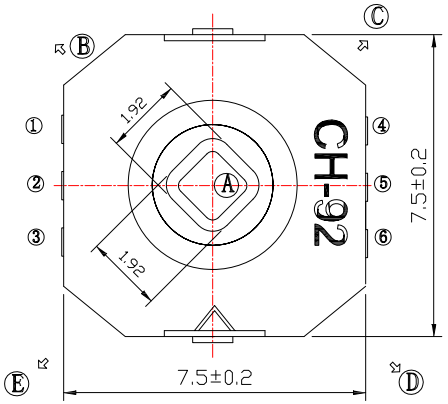

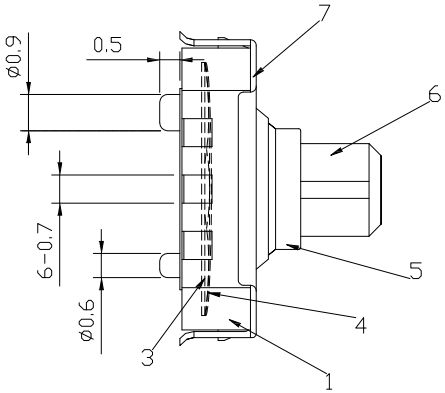

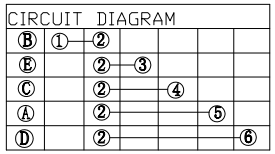

(CIRCUIT DIAGRAM)

SPECIFICATIONS

Rating	50mA , 12V DC
Insulation Resistance	100MΩ Min.
Dielectric Withstanding Voltage	AC 250 V(50Hz)1min
Contact Resistance	100mΩ Max.
Operating Life	30,000 cycles

NO.	DESCRIPTION	QTY	MATERIAL	PLATING
G	COVER	1	SUS	Ag plated
F	KNOB	1	PPA	Black
E	PLUM KNOB	1	PA6T	Black
D	TAPE	1	PI FILM	Yellow
C	CONTACT	2	SUS	Ag plated
B	TERMINAL	6	PHOSPHOR BRONZE	Ag plated
A	BASE	1	LCP	Black

ITEM NO.	DESCRIPTION	DRAWN	DATE
8	更新尺寸	Jack	110222
7	更新圖面	Jack	081922
6	更新圖面	Jack	062122
5	更新圖面	Jack	122921
4	更新材質	Jack	072021
3	更新PCB LAYOUT端子編號	Jack	082319
2	更新PCB LAYOUT尺寸	Jack	091117
1	更新材質	Jack	073013

CONTACT 建倚科技股份有限公司
CONTACT TECHNOLOGY CORP.

TOLERANCE UNLESS OTHERWISE STATED : Up to 5 ±0.2; Above 5 ~ 15 ±0.3; Above 15 ~ 30 ±0.4; Above 30 ~ 50 ±0.5; Angle ±0.3°

3RD. ANGEL'S | UNITS MM

DRAWN BY: Jack Lu	DATE 11/02/22	MAT'L		TITLE	SWITCH
CHECKED BY: Jacky Chen	DATE 11/02/22	FINISH		MODLE	Multi Function SWITCH
APPROVED BY: Tony Kao	DATE 11/02/22	SCALE	1 : 1	DWG NO.	K03-S246
		SHEET NO.	1 of 1	PART NO.	K03-S246

SIZE A4 | VER R8