DIMENSIONS

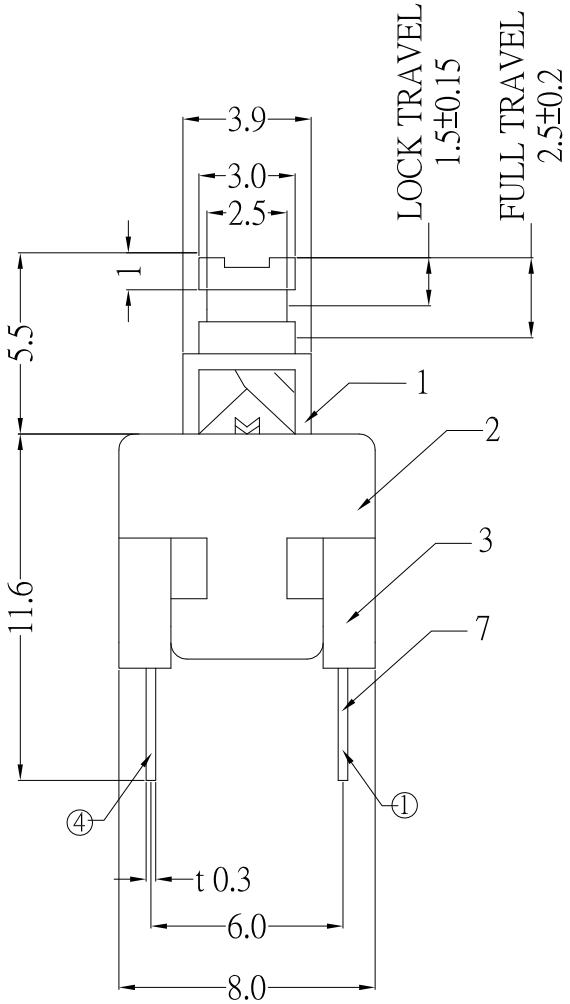

NOTE:

1. PS-D15L-S191: SELF- LOCK ;
2. PS-D15NL-S191:NON-LOCK

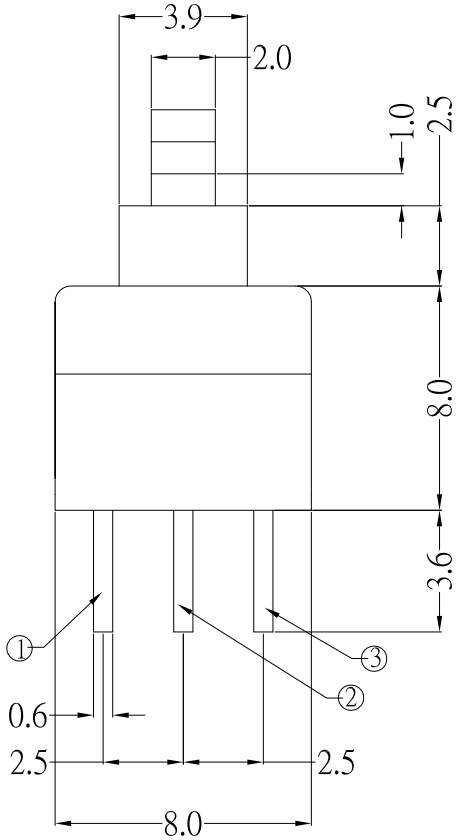

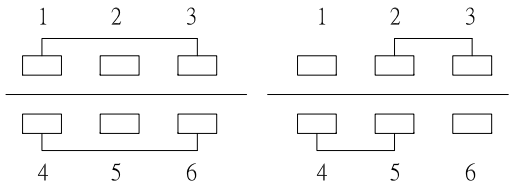

SCHEMATIC

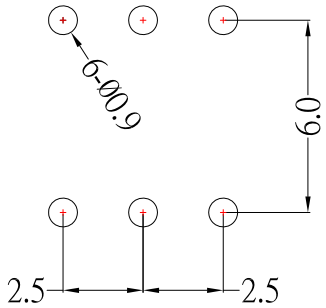

P.C.B MOUNTING PATTERN

SPECIFICATIONS

1.Rating : DC 30V 0.2A
2.Circuit : 2P2T
3.Timing : Non-Shorting
4.Operating force : 180 ± 50gf
5.Life test : 10,000 cycles

NO.	DESCRIPTION	QTY	MATERIAL	REMARK
7	TERMINAL	6	BRASS	Ag-Plated
6	CONTACT	1	PHOSPHOR BRONZE	Ag-Plated
5	SPRING	1	SUS	NATURAL
4	CAM STICK	1	SUS WIRE	NATURAL
3	CASE	1	PBT	BLACK
2	COVER	1	POM	WHITE
1	KNOB	1	POM	BLUE

ITEM NO.	DESCRIPTION	DRAWN	DATE
6	新增SPEC	Jack	102315
5	更新SCHEMATIC	Jack	040814
4	更新PIN編號	Jack	083013
3	尺寸更新	Jack	061313
2	新增尺寸	Jack	060713
1	更新材質	Jack	052813

CONTACT 建倚科技股份有限公司
CONTACT TECHNOLOGY CORP.

TOLERANCE UNLESS OTHERWISE STATED : Up to 5 ±0.2; Above 5 ~ 15 ±0.3; Above 15 ~ 30 ±0.4; Above 30 ~ 50 ±0.5; Angle ±0.3°

3RD. ANGEL'S | UNITS | MM

DRAWN BY: Jack Lu	DATE 10/23/15	MAT'L		TITLE	SWITCH		
CHECKED BY: Jacky Chen	DATE 10/23/15	FINISH		MODLE	PUSH SWITCH		
APPROVED BY: Tony Kao	DATE 10/23/15	SCALE	1 : 1	DWG NO.	PS-D15x-S191	SIZE	A4
		SHEET NO.	1 of 1	PART NO.	PS-D15x-S191	VER	A3