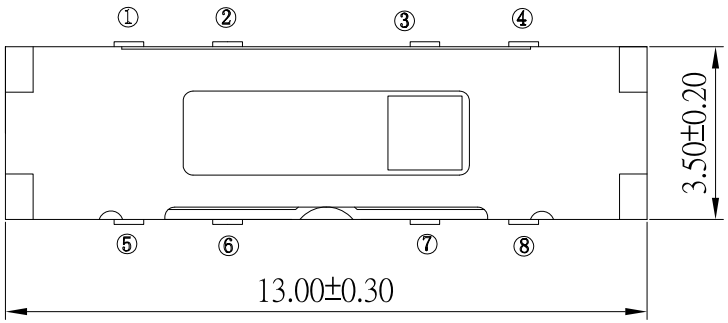

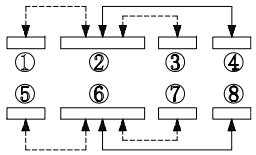

CIRCUIT DIAGRAM

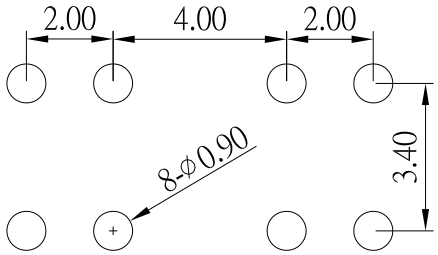

P.C.B LAND PATTERN

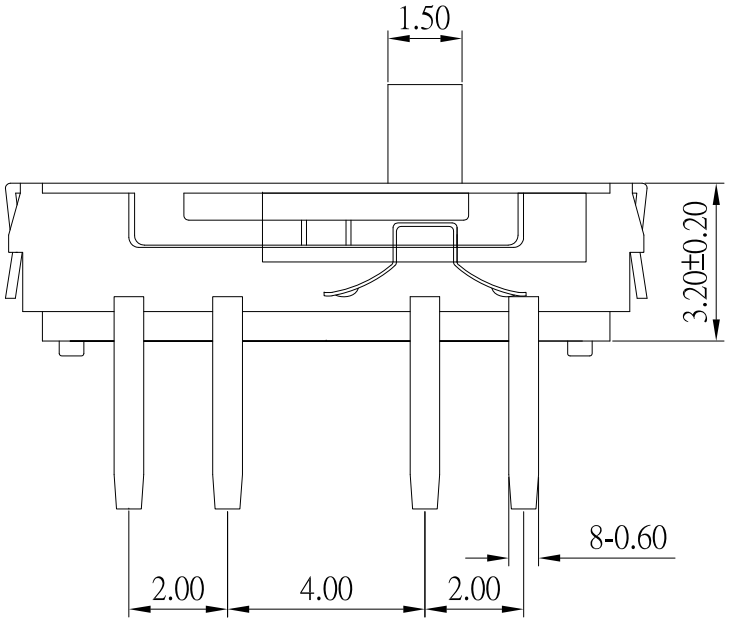

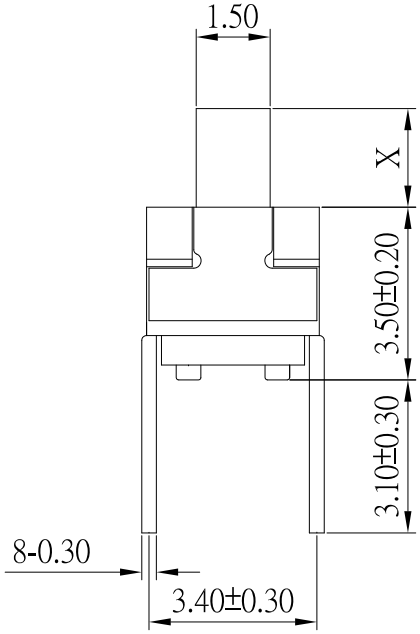

MODEL NO.	KNOB(X)
SS-F36	2.0 mm
SS-F36A	4.0 mm

SPECIFICATIONS

Rating	0.3A 6V DC
Insulation Resistance	100MΩ Min.
Dielectric Withstanding Voltage	AC 250 V(50Hz)1min
Contact Resistance	100mΩ Max.
Operating Force	230 ± 70gf
Operating Life	10,000 cycles

NO.	DESCRIPTION	QTY	MATERIAL	PLATING
E	TERMINAL	8	PHOSPHOR BRONZE	Ag plated
D	CLIP	2	PHOSPHOR BRONZE	Ag plated
C	COVER	1	STAINLESS STEEL	
B	CASE	1	LCP	Black
A	SLIDER	1	PA46	Black

ITEM NO.	DESCRIPTION	DRAWN	DATE
5	更新材質	Jack	121521
4	更新圖面	Jack	011421
3	更新CIRCUIT DIAGRAM	Jack	120618
2	更新為A0版	Jack	021517
1	更新材質	Jack	011817

CONTACT 建倚科技股份有限公司
CONTACT TECHNOLOGY CORP.

TOLERANCE UNLESS OTHERWISE STATED : Up to 5 ±0.2; Above 5 ~ 15 ±0.3; Above 15 ~ 30 ±0.4; Above 30 ~ 50 ±0.5; Angle ±0.3°

3RD. ANGEL'S | UNITS MM

DRAWN BY: Jack Lu	DATE 12/15/21	MAT'L		TITLE	SWITCH		
CHECKED BY: Jacky Chen	DATE 12/15/21	FINISH		MODLE	SLIDE SWITCH		
APPROVED BY: Tony Kao	DATE 12/15/21	SCALE	1 : 1	DWG NO.	SS-F36x-B-S246	SIZE	A4
		SHEET NO.	1 of 1	PART NO.	SS-F36x-B-S246	VER	R5