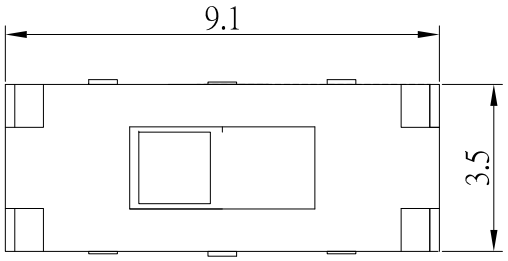

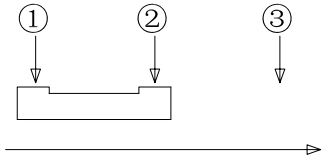

CIRCUIT DIAGRAM

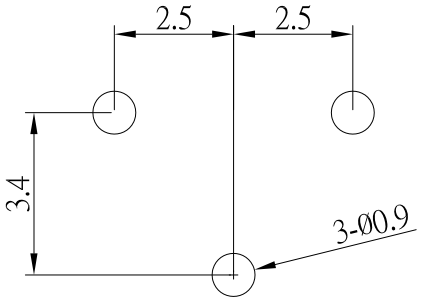

P.C.B LAND PATTERN

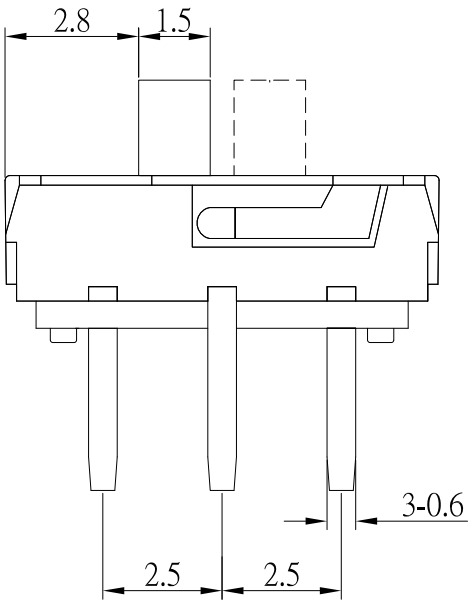

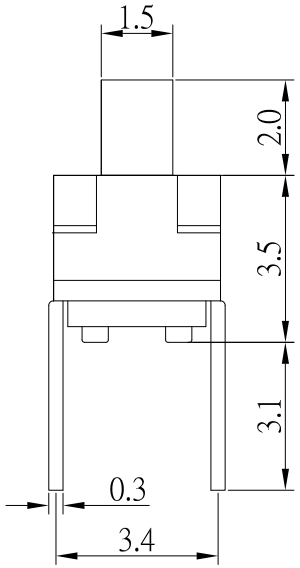

SPECIFICATIONS

Rating	0.3A 6V DC
Insulation Resistance	50MΩ Min.
Dielectric Withstanding Voltage	AC 250 V(50Hz)1min
Contact Resistance	100mΩ Max.
Operating Force	200 ± 50gf
Operating Life	10,000 cycles

NO.	DESCRIPTION	QTY	MATERIAL	PLATING
E	TERMINAL	3	PHOSPHOR BRONZE	Ag plated
D	CLIP	1	BECU	Ag plated
C	COVER	1	SUS	
B	CASE	1	PA6T	Black
A	SLIDER	1	PA46	Black

ITEM NO.	DESCRIPTION	DRAWN	DATE

建倚科技股份有限公司
CONTACT TECHNOLOGY CORP.

TOLERANCE UNLESS OTHERWISE STATED :
Up to 5 ± 0.2
Above 5 ~ 15 ± 0.3
Above 15 ~ 30 ± 0.4
Above 30 ~ 50 ± 0.5
Angle ± 0.3°

3RD. ANGEL'S | UNITS | MM

DRAWN BY: Jack Lu	DATE 07/18/13	MAT'L		TITLE	SWITCH
CHECKED BY: Jacky Chen	DATE 07/18/13	FINISH		MODLE	SLIDE SWICTH
APPROVED BY: Tony Kao	DATE 07/18/13	SCALE	1 : 1	DWG NO.	SS-B35-B-S246
		SHEET NO.	1 of 1	PART NO.	SS-B35-B-S246

SIZE A4 | VER R