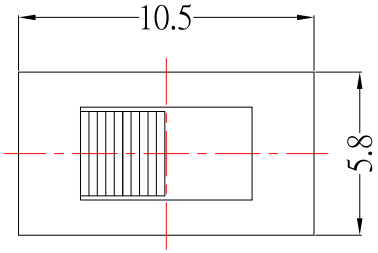

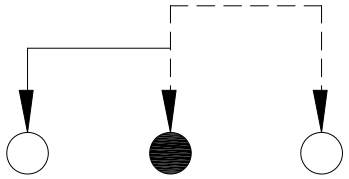

SCHEMATIC

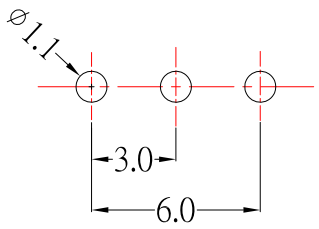

P.C.B MOUNTING PATTERN

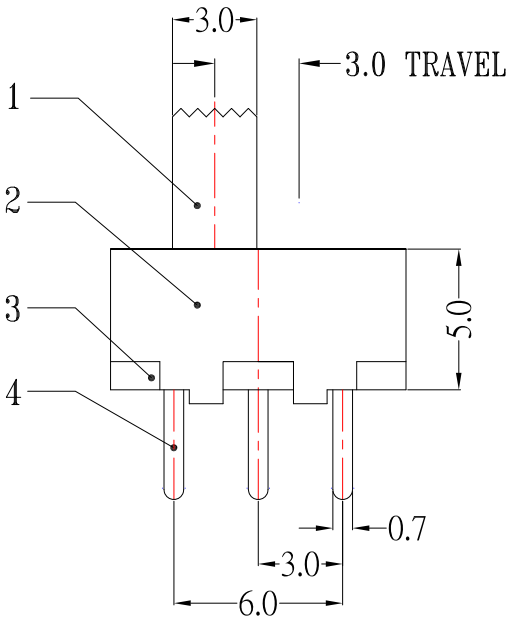

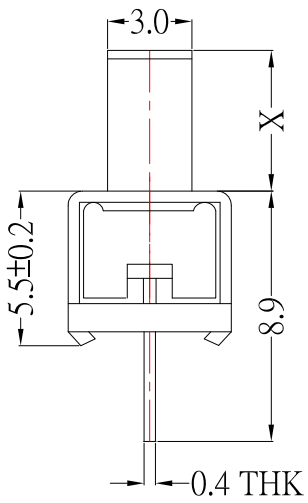

Model No.	X(mm)
SS-12F20-G2	2mm
SS-12F20-G3	3mm
SS-12F20-G4	4mm
SS-12F20-G5	5mm
SS-12F20-G6	6mm
SS-12F20-G7	7mm
SS-12F20-G8	8mm
SS-12F20-G9	9mm

SPECIFICATIONS

Rating	DC 50V 0.5A
Circuit	1P - 2T
Contact Resistance	200mΩ Max.
Insulation Resistance	100MΩ Min.
Operating Force	180gf ± 80gf
Operating Life (cycles)	10,000

NO.	DESCRIPTION	QTY	MATERIAL	REMARK
6	CONTACT	1	BRASS	Ag-Plated
5	SPRING	1	STEEL	Natural
4	TERMINAL	3	BRASS	Ag-Plated
3	BASE	1	PHENOLIC RESIN	Natural
2	FRAME	1	STEEL	Ni-Plated
1	KNOB	1	POM	Black

ITEM NO.	DESCRIPTION	DRAWN	DATE
3	更新FRAME鍍層	Jack	072922
2	更新圖面	Jack	012519
1	新增SPEC	Jack	112014

建倚科技股份有限公司
CONTACT TECHNOLOGY CORP.

TOLERANCE UNLESS OTHERWISE STATED : Up to 5 ±0.2; Above 5 ~ 15 ±0.3; Above 15 ~ 30 ±0.4; Above 30 ~ 50 ±0.5; Angle ±0.3°

3RD. ANGEL'S | UNITS MM

DRAWN BY: Jack Lu	DATE 07/29/22	MAT'L		TITLE	SWITCH
CHECKED BY: Jacky Chen	DATE 07/29/22	FINISH		MODLE	SLIDE SWITCH
APPROVED BY: Tony Kao	DATE 07/29/22	SCALE	1 : 1	DWG NO.	SS-12F20-Gx-S191
		SHEET NO.	1 of 1	PART NO.	SS-12F20-Gx-S191

SIZE A4 | VER R3