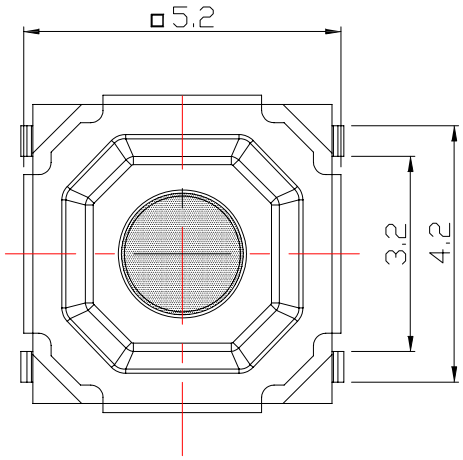

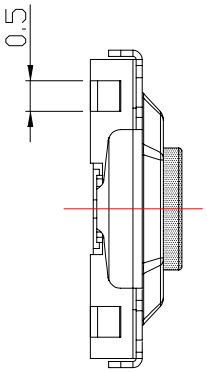

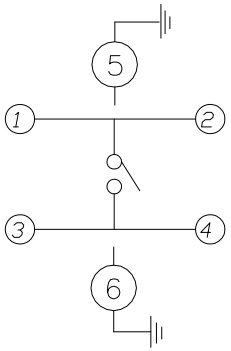

CIRCUIT DIAGRAM

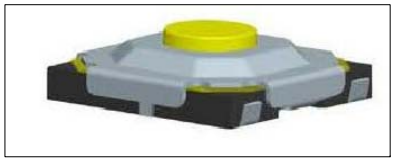

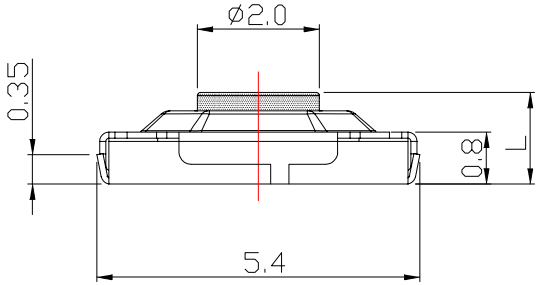

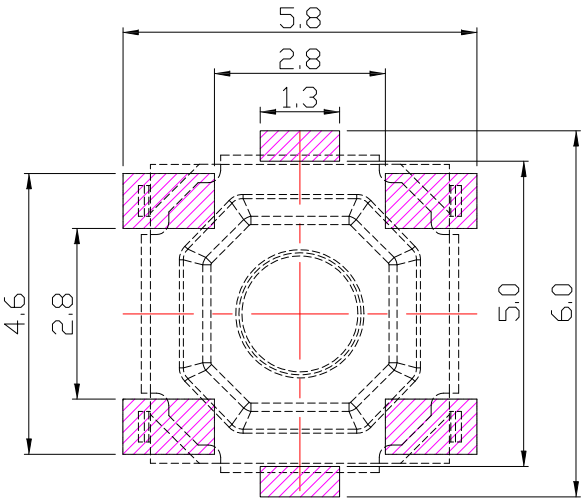

P.C.B. LAYOUT MOUNTING PATTERN

Model No.	L (mm)	STEM MATERIAL
TS-A87PU	1.5	BRASS
TS-A87PUA	4.3	LCP
TS-A87PUB	1.7	LCP
TS-A87PUD	2.3	BRASS
TS-A87PUE	3.0	BRASS

SPECIFICATIONS

Rating	DC 12V 50mA Max.			
Contact Resistance	100mΩ Max.			
Travel	0.25 ± 0.1mm			
Operating Force	2	160 ± 50gf	3	250 ± 50gf
Operating Life (cycles)	100,000			

ITEM NO.	DESCRIPTION	DRAWN	DATE
2	更新高度選項及新增STEM MATERIAL	Jack	062714
1	更新CIRCUIT DIAGRAM	Jack	052614

CONTACT 建倚科技股份有限公司
CONTACT TECHNOLOGY CORP.

TOLERANCE UNLESS OTHERWISE STATED : Up to 5 ±0.2; Above 5 ~ 15 ±0.3; Above 15 ~ 30 ±0.4; Above 30 ~ 50 ±0.5; Angle ±0.3°

3RD. ANGEL'S | UNITS MM

		DATE
DRAWN BY:	Jack Lu	06/27/14
CHECKED BY:	Jacky Chen	06/27/14
APPROVED BY:	Tony Kao	06/27/14

MAT'L		TITLE	SWITCH
FINISH		MODLE	TACT SWITCH
SCALE	1 : 1	DWG NO.	TS-A87PUx-x-S126
SHEET NO.	1 of 1	PART NO.	TS-A87PUx-x-S126

SIZE A4 | VER R2