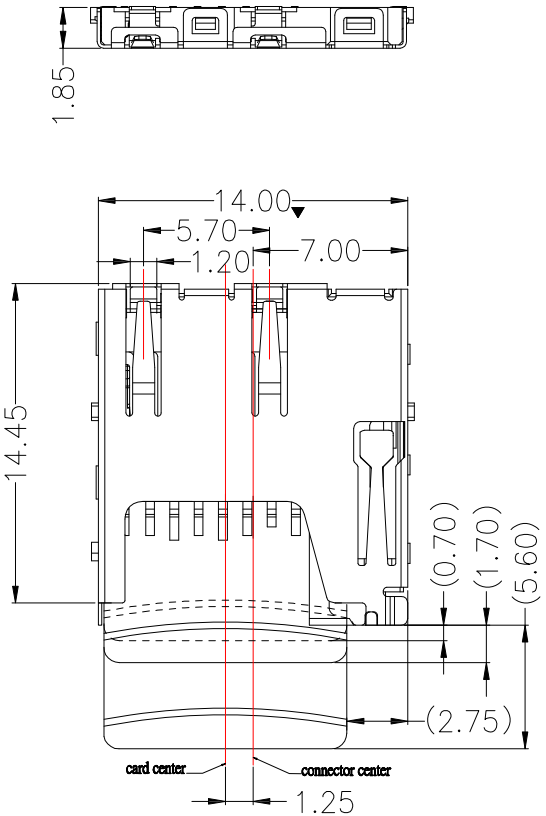

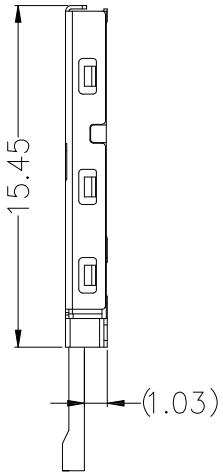

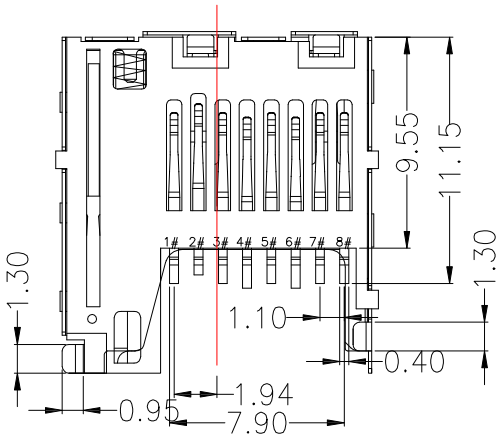

Card Detect Switch Cirsuit	
card detect ○—○ Ground without card (Normally closed)	card detect ○/○ Ground Card inserted

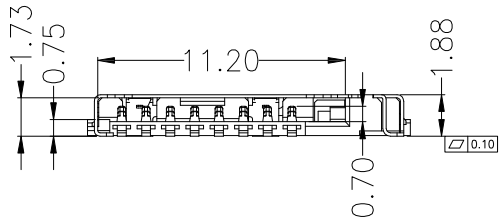

MicroSD DEFINITION

PIN NO.	PIN ASSIGNMENT
1#	DAT2
2#	CD/DAT3
3#	CMD
4#	VDD
5#	CLK
6#	VSS
7#	DAT0
8#	DAT1

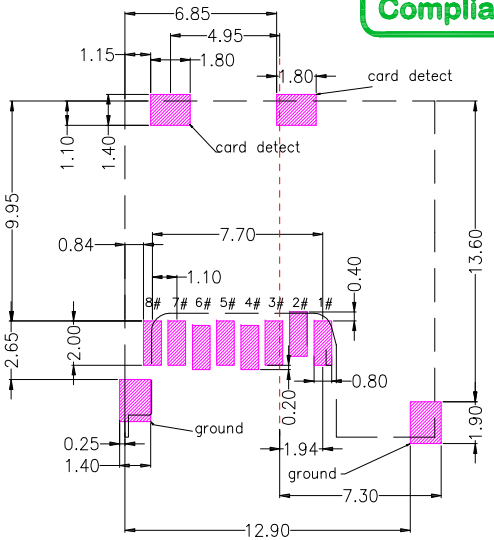

PCB LAYOYT

SPECIFICATION

Electrical :

1. Rating: 0.5A , 100V
2. Contact Resistance: 100 mΩ Max.
3. Insulation Resistance: 1000 MΩ Min.
4. Operating Temperature: -25°C ~85°C

Material:

1. Housing: LCP,Black
2. Contact: Phosphor Bronze
3. Shell: SUS

Finish:

1. Contact: Plated Gold in Mating Area ;
   Tin Plated on Solder Balls ;
   Nickel under plated overall
2. Shell: Nickel under Plated surface layer

ITEM NO.	DESCRIPTION	DRAWN	DATE
2	新增Switch Cirsuit	Jack	101118
1	更新料號	Jack	100918

CONTACT 建倚科技股份有限公司 CONTACT TECHNOLOGY CORP.

TOLERANCE UNLESS OTHERWISE STATED : Up to 5 ±0.2; Above 5 ~ 15 ±0.3; Above 15 ~ 30 ±0.4; Above 30 ~ 50 ±0.5; Angle ±0.3°

3RD. ANGEL'S | UNITS | MM

DRAWN BY: Jack Lu	DATE 10/11/18	MAT'L	
CHECKED BY: Jacky Chen	DATE 10/11/18	FINISH	
APPROVED BY: Tony Kao	DATE 10/11/18	SCALE	1 : 1
		SHEET NO.	1 of 1

TITLE	CONNECTOR		
MODLE	T-FLASH 內桿常閉卡座 PUSH-PUSH		
DWG NO.	SD-TFC0001S10-S267	SIZE	A4
PART NO.	SD-TFC0001S10-S267	VER	R2