RoHS Compliant

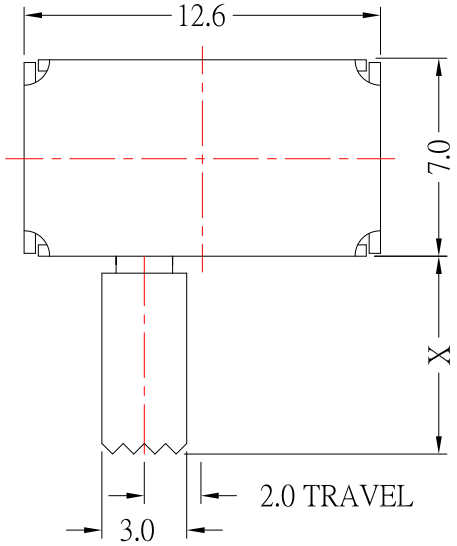

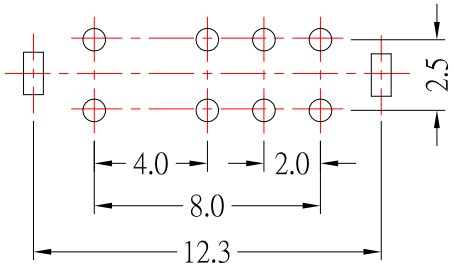

P.C.B LAYOUT
BOTTOM VIEW

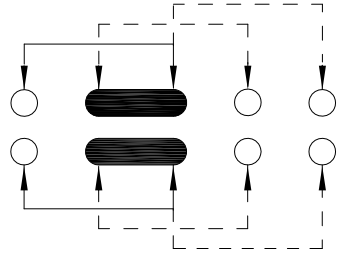

SCHEMATIC

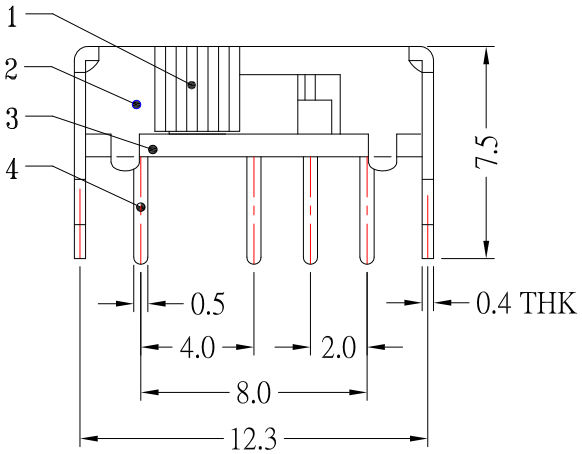

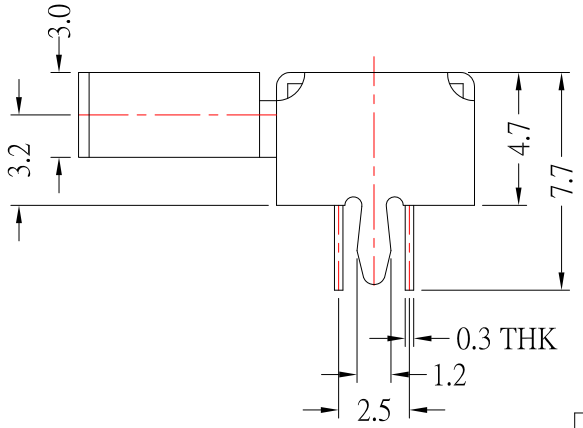

Model No.	X(mm)
SK-23D07-G2	2mm
SK-23D07-G3	3mm
SK-23D07-G4	4mm
SK-23D07-G5	5mm
SK-23D07-G6	6mm
SK-23D07-G7	7mm
SK-23D07-G8	8mm
SK-23D07-G9	9mm

SPECIFICATIONS

Rating	0.3A 50V DC
Function	2P3T
Timing	Shorting
Contact Resistance	200mΩ Max.
Insulation Resistance	100MΩ Min.
Operating Force	300gf ± 100gf
Operating Life	10,000 cycle

NO.	PARTS	MATERIALS	Q'TY	FINISH
6	SPRING PLATE	PBS	1	NATURAL
5	CONTACT CLIP	PBS	2	Ag-PLATED
4	TERMINAL	BRASS	8	Ag-PLATED
3	BASE	PHENOLIC RESIN	1	NATURAL
2	FRAME	SPCC	1	Ni-PLATED
1	KNOB	POM	1	BLACK

ITEM NO.	DESCRIPTION	DRAWN	DATE
2	更新Contact Resistance	Jack	111914
1	新增SPEC	Jack	081814

CONTACT 建倚科技股份有限公司
CONTACT TECHNOLOGY CORP.

TOLERANCE UNLESS OTHERWISE STATED : Up to 5 ±0.2; Above 5 ~ 15 ±0.3; Above 15 ~ 30 ±0.4; Above 30 ~ 50 ±0.5; Angle ±0.3°

3RD. ANGEL'S | UNITS MM

DRAWN BY: Jack Lu	DATE 11/19/14	MAT'L	
CHECKED BY: Jacky Chen	DATE 11/19/14	FINISH	
APPROVED BY: Tony Kao	DATE 11/19/14	SCALE 1 : 1	SHEET NO. 1 of 1

TITLE	SWITCH		
MODLE	SLIDE SWITCH Knob :3x3mm		
DWG NO.	SK-23D07-Gx-S191	SIZE	A4
PART NO.	SK-23D07-Gx-S191	VER	R2