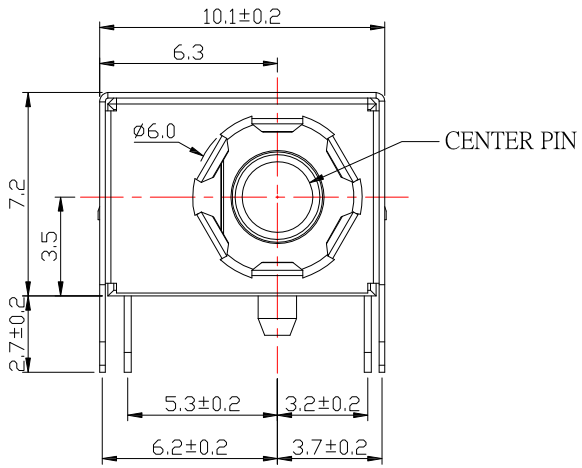

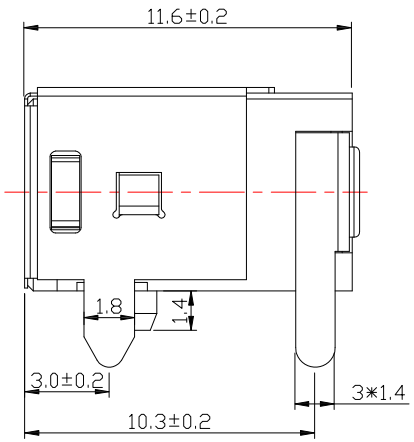

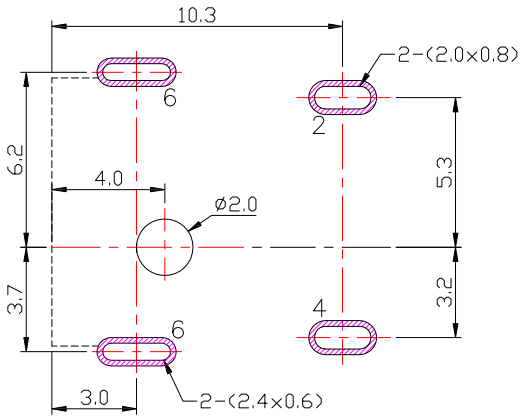

P.C.B LAYOUT
TOP VIEW

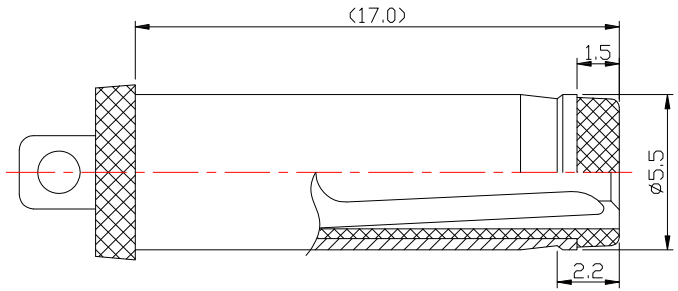

RECOMMENDED PLUG

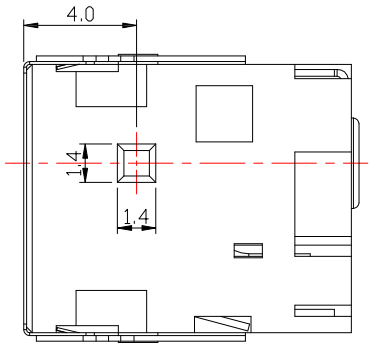

MODEL NO.	DC-D044AK1-x
SCHEMATIC	4/5(+) 2(−)
CENTER PIN	ø 2.0mm
	ø 2.5mm

SPECIFICATION

1.Rating ：DC 30V, 5.0A；
2.Contact resistance：≤30mΩ；
3.Insulation resistance：≥100MΩ；
4.Withstand voltage：500VAC ；
5.Insertion and extraction force：3-30N;
6.life test：5,000 cycles。

NO.	DESCRIPTION	QTY	MATERIAL	PLATING
7	COVER	1	SUS	Ni-Plating
6	CONTACT FOOT	1	BRASS	Ag-Plating
5	PIN	1	BRASS	Ni-Plating
4	CONTACT FOOT	1	BRASS	Ag-Plating
2	SPRING PIECE	1	PHOSPHOR BRONZE	Ag-Plating
1	HOUSING	1	LCP	

ITEM NO.	DESCRIPTION	DRAWN	DATE

建倚科技股份有限公司
CONTACT TECHNOLOGY CORP.

TOLERANCE UNLESS OTHERWISE STATED : Up to 5 ±0.2; Above 5 ~ 15 ±0.3; Above 15 ~ 30 ±0.4; Above 30 ~ 50 ±0.5; Angle ±0.3°

3RD. ANGEL'S | UNITS MM

DRAWN BY: Jack Lu	DATE 12/18/25	MAT'L		TITLE	JACK
CHECKED BY: Jacky Chen	DATE 12/18/25	FINISH		MODLE	DC JACK 不帶偵測PIN
APPROVED BY: Tony Kao	DATE 12/18/25	SCALE	1 : 1	DWG NO.	DC-D044AK1-x-S124
		SHEET NO.	1 of 1	PART NO.	DC-D044AK1-x-S124

SIZE A4 | VER R