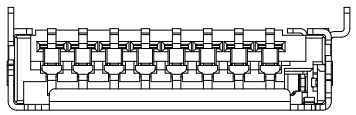

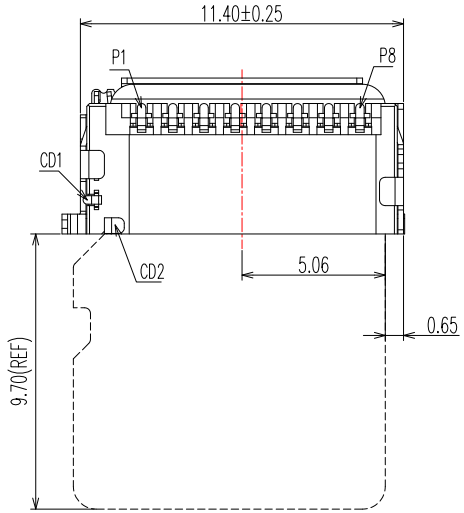

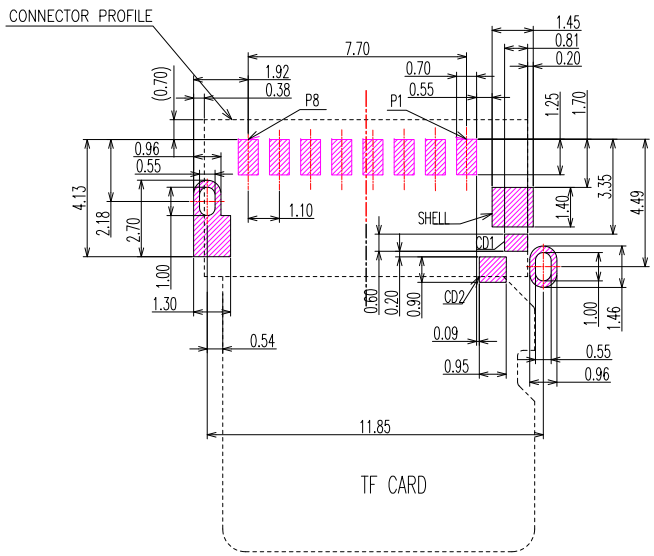

PCB LAYOUT

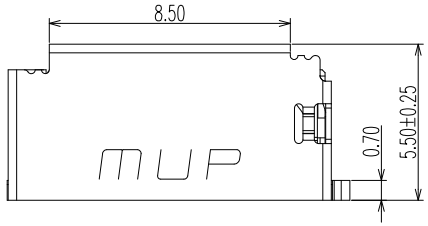

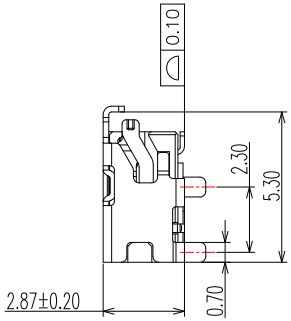

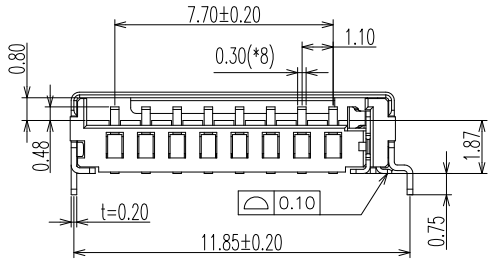

PIN ASSIGNMENT		
PIN	SD	SPI
1	DAT2	RSV
2	CD/DAT3	CS
3	CMD	DI
4	VDD	VDD
5	CLK	SCLK
6	VSS	VSS
7	DAT0	DO
8	DAT1	RSV

SPECIFICATION

Electrical :

1.Contact Resistance: 50 mΩ Max.

2.Insulation Resistance: 1000 MΩ Min.

3.Dielectric Withstanding Voltage: 500V AC

4.Life Cyeles: 5000 cycles

Environmental:

1.Operating Temperature: -40˚C ~ +85˚C.

ITEM	PART NAME	Q'TY	MATERIAL	FINISH
1	HOUSING	1	Hi-temp Thermoplastic	Black UL94V-0
2	DATA CONTACT	8	Copper Alloy	Contact area: Gold plated
3	SHELL	1	Stainless Steel	Ni plated
4	DETECT 1	1	Copper Alloy	Contact area: Gold plated
5	DETECT 2	1	Copper Alloy	Contact area: Gold plated

ITEM NO.	DESCRIPTION	DRAWN	DATE

CONTACT 建倚科技股份有限公司 CONTACT TECHNOLOGY CORP.

TOLERANCE UNLESS OTHERWISE STATED : Up to 5 ±0.2; Above 5 ~ 15 ±0.3; Above 15 ~ 30 ±0.4; Above 30 ~ 50 ±0.5; Angle ±0.3

3RD. ANGEL'S | UNITS MM

DRAWN BY: Jack Lu	DATE 04/09/26	MAT'L	
CHECKED BY: Jacky Chen	DATE 04/09/26	FINISH	
APPROVED BY: Tony Kao	DATE 04/09/26	SCALE	1 : 1
		SHEET NO.	1 of 1

TITLE	CONNECTOR		
MODLE	MICRO SD 卡 短體不帶偵測PIN		
DWG NO.	SD-TF03-M6017-S494	SIZE	A4
PART NO.	SD-TF03-M6017-S494	VER	R