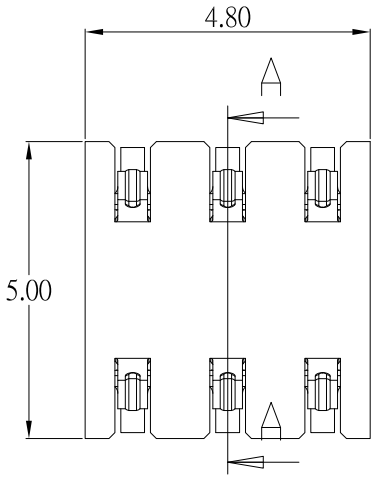

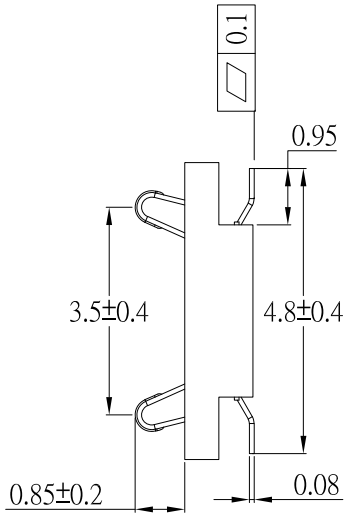

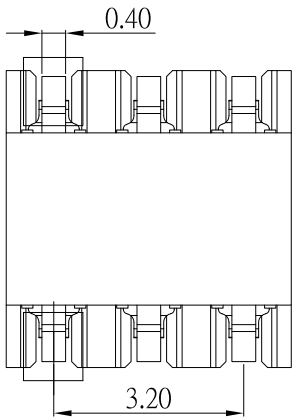

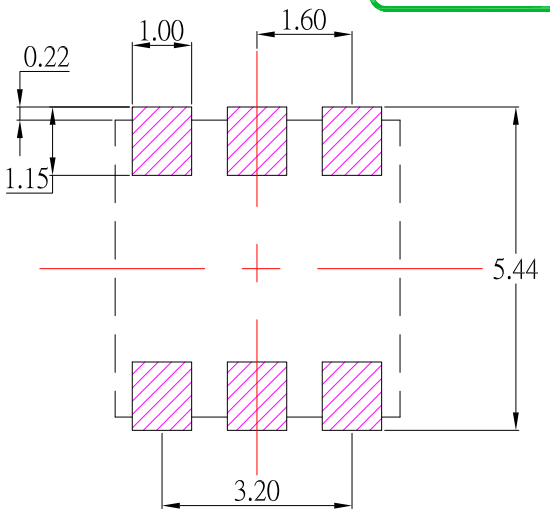

P.C.B LAYOUT

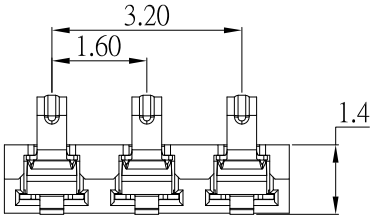

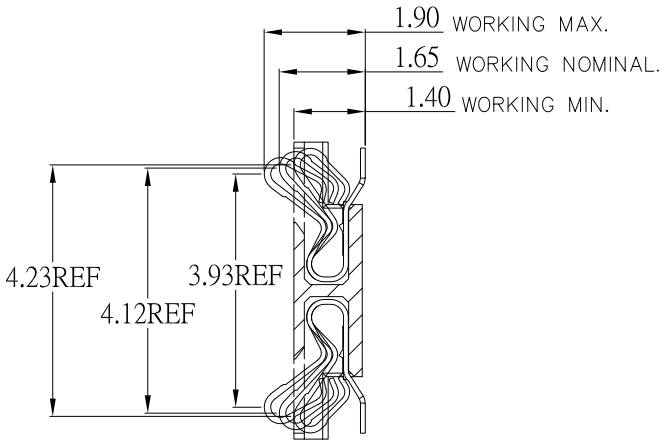

RECOMMEND WORKING RANGE.

剖面 A-A

—NOTES—

1.Electrical:

1.1 Rating: 12V , 1.0A

1.2 Contact resistance: 30m ohms max.

1.3 Dielectric withstanding voltage: 500V RMS.

1.4 Insulation resistance: 500M ohms min.

1.5 Life: 3000 cycles

2.Environment:

2.1 Operating Temperature: −40°to+85°.

3.MATERIAL:

3.1.Housing: LCP,black;

3.2.Terminal: Copper Allpy

4.FINISH:

4.1 TERMINAL: GOLD Plated ALL Over NICKEL.

ITEM NO.	DESCRIPTION	DRAWN	DATE

CONTACT 建倚科技股份有限公司
CONTACT TECHNOLOGY CORP.

TOLERANCE UNLESS OTHERWISE STATED : Up to 5 ±0.2; Above 5 ~ 15 ±0.3; Above 15 ~ 30 ±0.4; Above 30 ~ 50 ±0.5; Angle ±0.3°

3RD. ANGEL'S | UNITS | MM

DRAWN BY: Jack Lu	DATE 07/28/26	MAT'L	
CHECKED BY: Jacky Chen	DATE 07/28/26	FINISH	
APPROVED BY: Tony Kao	DATE 07/28/26	SCALE 1 : 1	SHEET NO. 1 of 1

TITLE	CONNECTOR
MODLE	BATTERY CONNECTOR 6PIN
DWG NO.	BC-1406A-06-S505
PART NO.	BC-1406A-06-S505

SIZE A4 | VER R