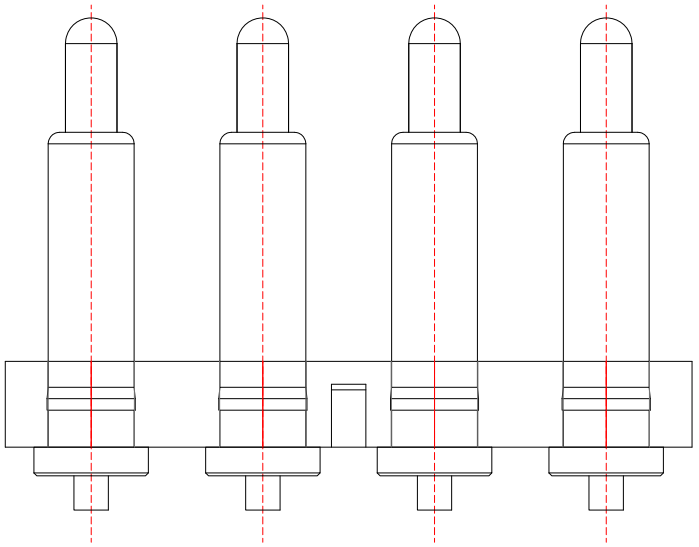

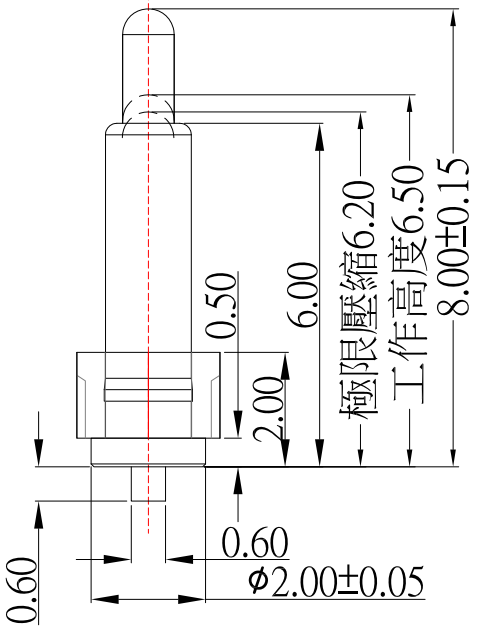

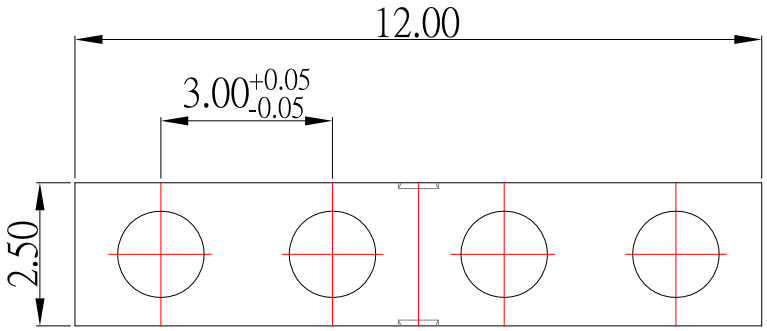

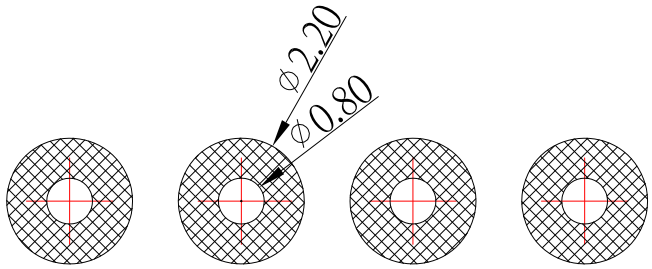

RECOMMEND PCB LAYOUT

NOTE

1. Material
   - Plunger: Brass
   - Barrel: Brass
   - Spring: SUS
   - Housing:PA9T
2. Plating
   - Plunger:Au over Ni
   - Barrel: Au over Ni
3. Electrical
   - Rated current & voltage: DC 12V; 2.0A Max.
4. Mechanical
   - Spring force: 40g±20% at normal working height
   - Durability: 10,000 cycles(minimum)
5. To ensure the best usage,please operateit based on the working height
   Based on the engineering drawings,shall not exceed the maximum allowed compression
6. To avoid arcing issue, The adaptor startto power supply after connector mated fully.

ITEM NO.	DESCRIPTION	DRAWN	DATE
1	新增PCB LAYOUT尺寸	Jack	082622

CONTACT 建倚科技股份有限公司
CONTACT TECHNOLOGY CORP.

TOLERANCE UNLESS OTHERWISE STATED : Up to 5 ±0.2; Above 5 ~ 15 ±0.3; Above 15 ~ 30 ±0.4; Above 30 ~ 50 ±0.5; Angle ±0.3°

3RD. ANGEL'S | UNITS MM

		DATE
DRAWN BY:	Jack Lu	08/26/22
CHECKED BY:	Jacky Chen	08/26/22
APPROVED BY:	Tony Kao	08/26/22

MAT'L		TITLE	CONNECTOR
FINISH		MODLE	POGO PIN
SCALE	1 : 1	DWG NO.	PGC-806506-4P-S353
SHEET NO.	1 of 1	PART NO.	PGC-806506-4P-S353

SIZE A4 | VER R1