

P.C.B LAYEOUT

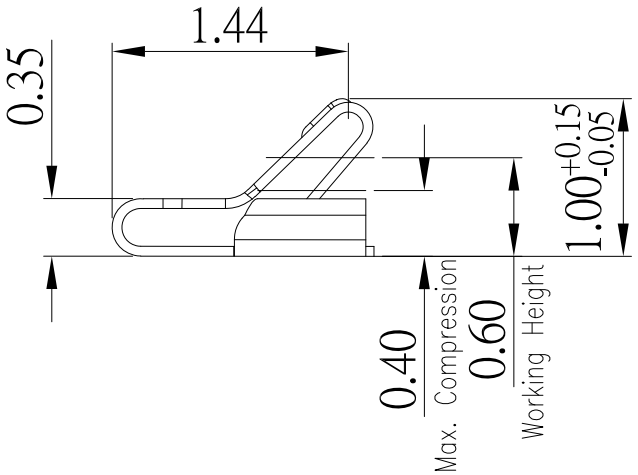

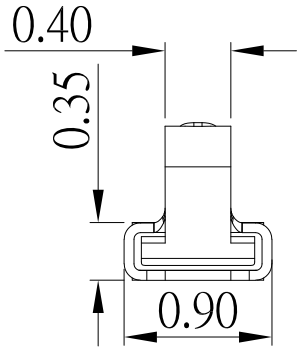

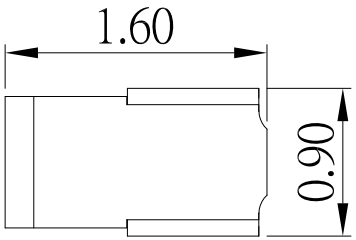

PRODUCT NO.

1. *SPECIFICATIONS:*
   - *1.1. CONTACT RESISTANCE:80 mΩ MAX*
   - *1.2. VOLTAGE RATING:1.5V/AC/DC/MAX*
   - *1.3. CURRENT RATING:1.0A/MAX*
   - *1.4. PRE-LOAD FORCE:0.5±0.1N ON CONTACT POINT*
   - *1.5. MAX.BEAM DEFLECTION:0.7±0.1N ON CONTACT POINT*
   - *1.6. DURABILITY:2000 CYCLES*
   - *1.7. OPERATING TEMPERATURE:-20°C~80°C*
2. *MATERIAL:*
   - *2.1. STAINLESS STEEL*
3. *FINISH:*
   - *3.1 NICKEL UNDERPLATING OVERALL*

ITEM NO.	DESCRIPTION	DRAWN	DATE

CONTACT 建倚科技股份有限公司
CONTACT TECHNOLOGY CORP.

TOLERANCE UNLESS OTHERWISE STATED : Up to 5 ±0.2; Above 5 ~ 15 ±0.3; Above 15 ~ 30 ±0.4; Above 30 ~ 50 ±0.5; Angle ±0.3°

3RD. ANGEL'S | UNITS | MM

DRAWN BY: Jack Lu	DATE 05/29/25	MAT'L	
CHECKED BY: Jacky Chen	DATE 05/29/25	FINISH	
APPROVED BY: Tony Kao	DATE 05/29/25	SCALE	1 : 1
		SHEET NO.	1 of 1

TITLE	CONNECTOR		
MODLE	Antenna Spring Terminal SMT TYPE H:1.0mm		
DWG NO.	AST-05-S486	SIZE	A4
PART NO.	AST-05-S486	VER	R