IP68

RoHS Compliant

SBC-WP160S7-20x-S410

鍍層厚度 :

Blank : 1u"
2 : 15u"
3 : 30u"

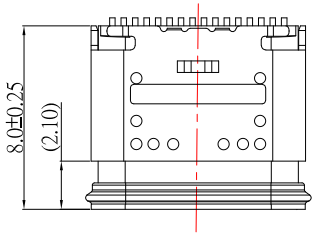

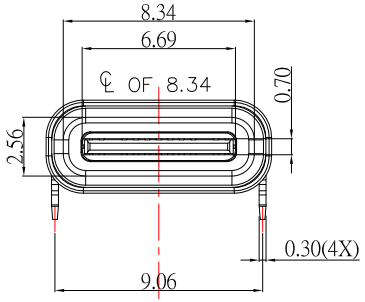

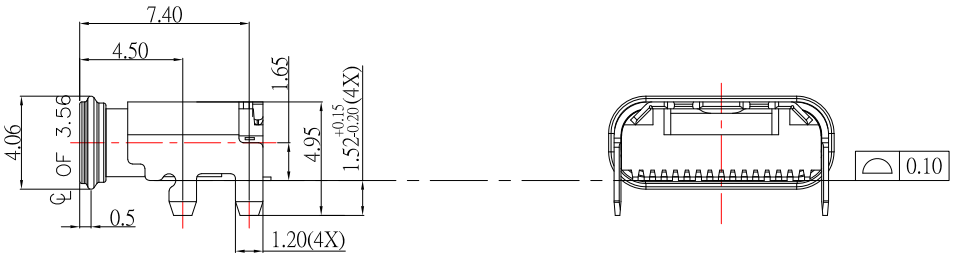

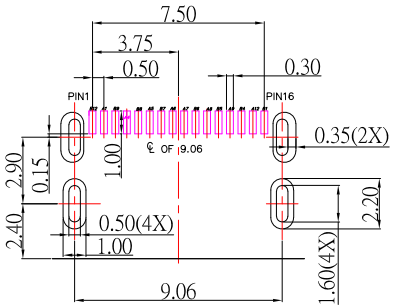

PCB LAYOUT

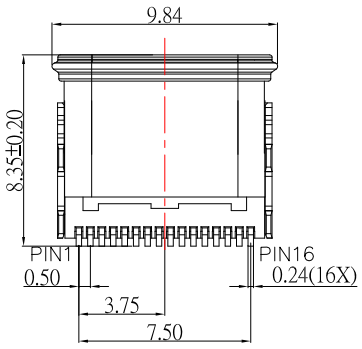

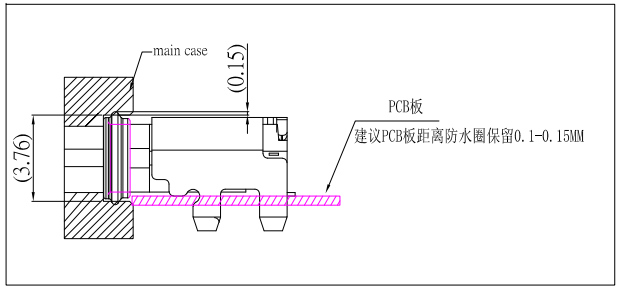

Pin	Signal	Description	Mating Sequence	Description	Signal	Pin
2	A1	GND	First	Ground return	GND	B12	1
/	A2	TX1+	/	Second	/	RX1+	B11	/
/	A3	TX1−	/	Second	/	RX1−	B10	/
4	A4	VBUS	Bus Power	First	Bus Power	VBUS	B9	3
6	A5	CC1	Configuration Channel	Second	Sideband Use(SBU)	SBU2	B8	5
8	A6	D+	Positive half of the USB 2.0 differential pair—Position 1	Second	Negative half of the USB 2.0 differential pair—Position 2	D−	B7	7
9	A7	D−	Negative half of the USB 2.0 differential pair—Position 1	Second	Positive half of the USB 2.0 differential pair—Position 2	D+	B6	10
11	A8	SBU1	Sideband Use(SBU)	Second	Configuration Channel	CC2	B5	12
13	A9	VBUS	Bus Power	First	Bus Power	VBUS	B4	14
/	A10	RX2−	/	Second	/	TX2−	B3	/
/	A11	RX2+	/	Second	/	TX2+	B2	/
15	A12	GND	Ground return	First	Ground return	GND	B1	16

SPECIFICATIONS

Electrical:

1.Rating: 5.0 A

2.Contact Resistance: 40 mΩ Max

3.Insulation Resistance: 100 MΩ Min

4.Dielectric Withstand Voltage: 100V AC

Mechanical:

1.Connector Mate and Unmate Force

1.1 Mate force: 5~20 N

1.2 Unmate force: 8~20 N

Material:

1.Housing: PA10T

2.Contact: C7025

3.Shell: SUS

4.O-ring: Silcone

Finish:

1.Contact: Plated Gold in Mating Area ;
Gold Plated on Solder Balls ;
Nickel under plated overall

2.Shell: Nickel under Plated surface layer

ITEM NO.	DESCRIPTION	DRAWN	DATE
2	更新材質	Jack	102026
1	新增PCB LAYOUT尺寸	Jack	083024

CONTACT 建倚科技股份有限公司
CONTACT TECHNOLOGY CORP.

TOLERANCE UNLESS OTHERWISE STATED :
Up to 5 ±0.2
Above 5 ~ 15 ±0.3
Above 15 ~ 30 ±0.4
Above 30 ~ 50 ±0.5
Angle ±0.3°

3RD. ANGEL'S | UNITS MM

		DATE
DRAWN BY:	Jack Lu	10/20/26
CHECKED BY:	Jacky Chen	10/20/26
APPROVED BY:	Tony Kao	10/20/26

MAT'L		TITLE	CONNECTOR
FINISH		MODLE	USB C TYPE 2.0 Female CH1.65防水型IP68
SCALE	1 : 1	DWG NO.	SBC-WP160S7-20x-S410
SHEET NO.	1 of 1	PART NO.	SBC-WP160S7-20x-S410

SIZE A4 | VER R2