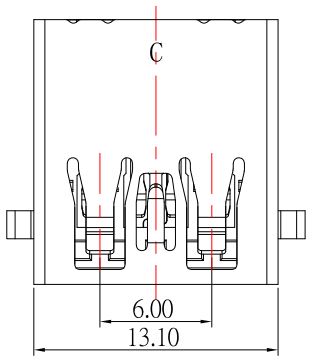

SUA-110E22-30x-S277

鍍層厚度：

Blank : 1u"
2 : 15u"
3 : 30u"

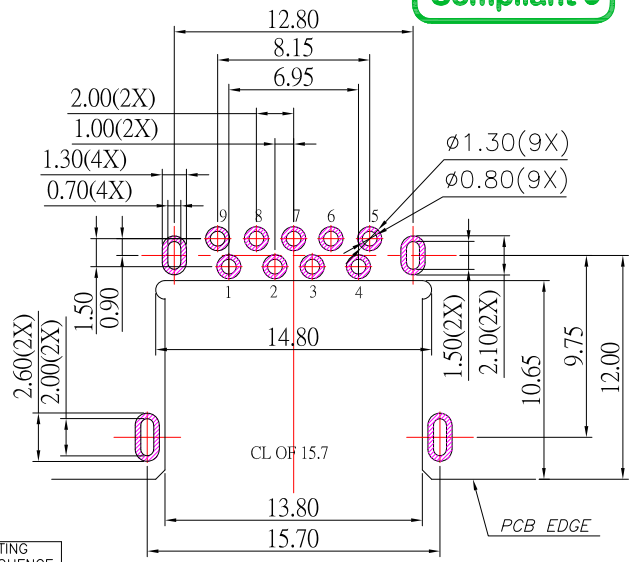

PCB LAYOUT

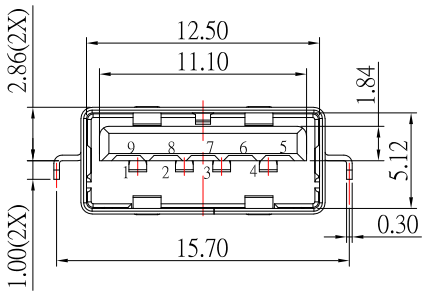

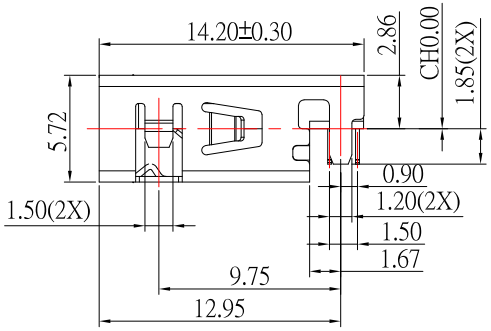

USB 3.0 PIN ASSIGNMENTS

Pin #	SIGNAL NAME	DESCRIPTION	MATING SEQUENCE
1	VBUS	POWER	SECOND
2	D−	USB 2.0 DIFFERENTIAL PAIR	THIRD
3	D+		
4	GND	GROUND FOR POWER RETURN	SECOND
5	StdA_SSRX−	SUPERSPEED RECEIVER DIFFERENTIAL PAIR	LAST
6	StdA_SSRX+		
7	GND_DRAIN	GROUND FOR SIGNAL RETURN	
8	StdA_SSTX−	SUPERSPEED TRANSMITTER DIFFERENTIAL PAIR	
9	StdA_SSTX+		
Shell	Shield	CONNECTOR METAL SHELL	FRIST

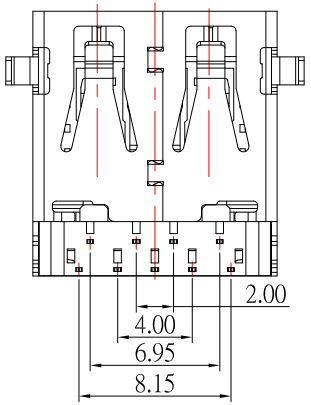

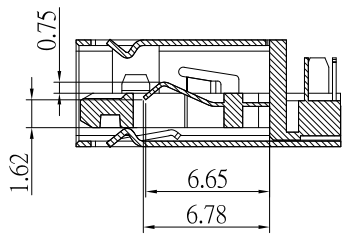

NOTE:

1.MATERIAL:

1.1 Housing: PA9T

1.2 Contact: Phosphor Bronze

1.3 Shell: SUS

2.Finish:

2.1 Contact: Plated Gold in Mating Area ;
Tin Plated on Solder Balls ;
Nickel under plated overall

2.2 Shell: Nickel under Plated surface layer

3.SPECIFICATION:

3.1 Rate: 30V DC , 1.8 A

3.2 insulator Resistance:100MΩ Min

3.3 Dielectric Strength: 100V AC

3.4 Contact Resistance: 30mΩ Max

3.5 Operation Temperature: -25℃ ~ +85℃

3.6 Insertion Force: 35 N Max

3.7 Extraction Force: 10 N Min

ITEM NO.	DESCRIPTION	DRAWN	DATE

CONTACT 建倚科技股份有限公司
CONTACT TECHNOLOGY CORP.

TOLERANCE UNLESS OTHERWISE STATED : Up to 5 ±0.2; Above 5 ~ 15 ±0.3; Above 15 ~ 30 ±0.4; Above 30 ~ 50 ±0.5; Angle ±0.3°

3RD. ANGEL'S | UNITS MM

		DATE
DRAWN BY:	Jack Lu	09/18/24
CHECKED BY:	Jacky Chen	09/18/24
APPROVED BY:	Tony Kao	09/18/24

MAT'L		TITLE	CONNECTOR
FINISH		MODLE	USB AF 3.0無捲邊 DIP 沉板 , 板上H2.86mm
SCALE	1 : 1	DWG NO.	SUA-110E22-30x-S277 SIZE A4
SHEET NO.	1 of 1	PART NO.	SUA-110E22-30x-S277 VER R