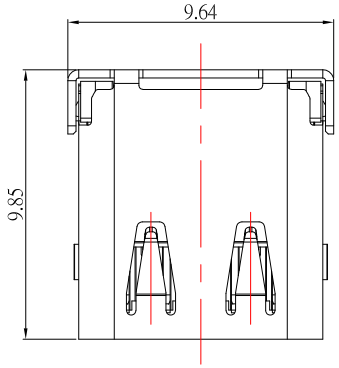

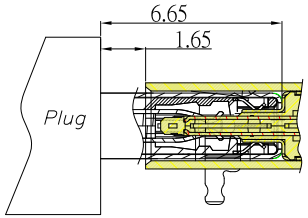

After Mating

SBC-240S46-45x-S338

鍍層厚度

1 : 3u"
2 : 15u"
3 : 30u"

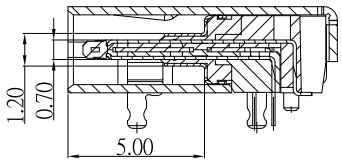

SECTION:A–A

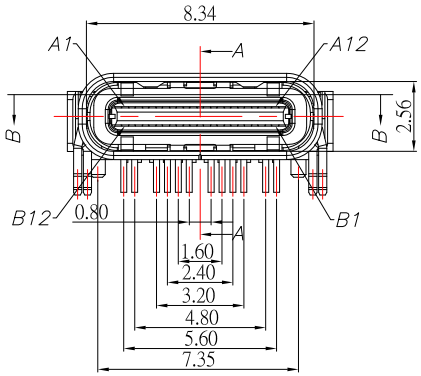

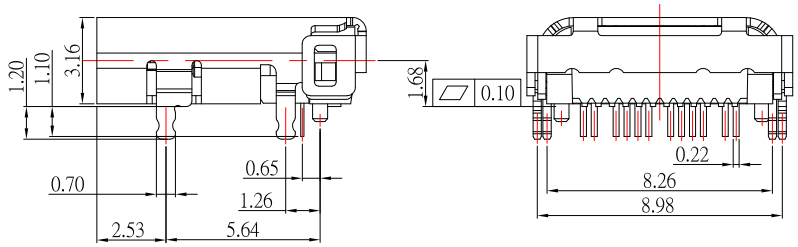

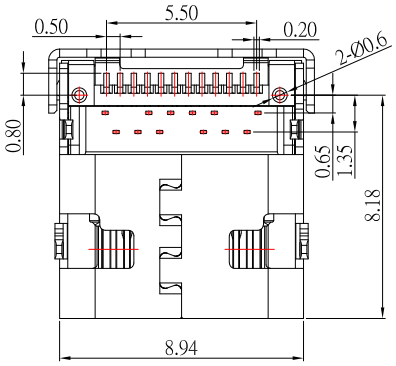

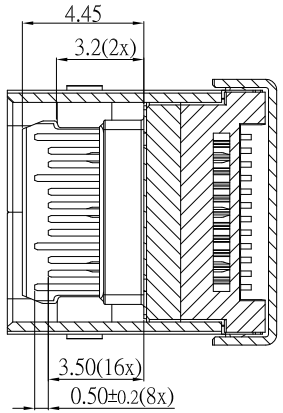

SECTION:B–B

USB TYPE-C FULL-FEATURED RECEPTACLE INTERFACE PIN ASSIGNMENTS

Pin	Signal Name	Description	Mating Sequence	Pin	Signal Name	Description	Mating Sequence
A1	GND	Ground return	First	B12	GND	Ground return	First
A2	SSTXp1	Positive half of first SuperSpeed TX differential pair	Second	B11	SSRXp1	Positive half of first SuperSpeed RX differential pair	Second
A3	SSTXn1	Negative half of first SuperSpeed TX differential pair	Second	B10	SSRXn1	Negative half of first SuperSpeed RX differential pair	Second
A4	VBUS	Bus Power	First	B9	VBUS	Bus Power	First
A5	CC1	Configuration Channel	Second	B8	SBU2	Sideband Use (SBU)	Second
A6	Dp1	Positive half of the USB 2.0 differential pair-Position 1	Second	B7	Dn2	Negative half of the USB 2.0 differential pair-Position 2	Second
A7	Dn1	Negative half of the USB 2.0 differential pair-Position 1	Second	B6	Dp2	Positive half of the USB 2.0 differential pair-Position 2	Second
A8	SBU1	Sideband Use(SBU)	Second	B5	CC2	Configuration Channel	Second
A9	VBUS	Bus Power	First	B4	VBUS	Bus Power	First
A10	SSRXn2	Negative half of second SuperSpeed RX differential pair	Second	B3	SSTXn2	Negative half of second SuperSpeed TX differential pair	Second
A11	SSRXp2	Positive half of second SuperSpeed RX differential pair	Second	B2	SSTXp2	Positive half of second SuperSpeed TX differential pair	Second
A12	GND	Ground return	First	B1	GND	Ground return	First

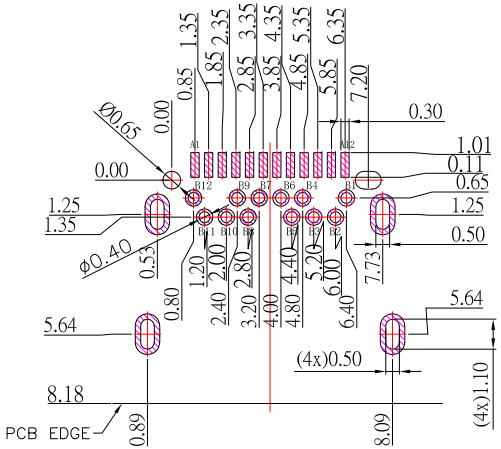

P.C.B LAYOUT

SPECIFICATIONS

Electrical:

1. Rating: 20V , 3.0A
2. Contact Resistance: 40 mΩ Max
3. Insulation Resistance: 100 MΩ Min
4. Dielectric Withstanding Voltage: 100V AC

Mechanical:

1. Connector Mate and Unmate Force
   - 1.1 Mate force: 5~20 N
   - 1.2 Unmate force: 8~20 N

Material:

1. Housing: LCP
2. Contact: C7025
3. Shell: SUS

Finish:

1. Contact: Plated Gold in Mating Area ;
   Gold Plated on Solder Balls ;
   Nickel under plated overall
2. Shell: Nickel under Plated surface layer

ITEM NO.	DESCRIPTION	DRAWN	DATE
1	新增尺寸	Jack	102226

CONTACT 建倚科技股份有限公司
CONTACT TECHNOLOGY CORP.

TOLERANCE UNLESS OTHERWISE STATED :
Up to 5 ±0.2
Above 5 ~ 15 ±0.3
Above 15 ~ 30 ±0.4
Above 30 ~ 50 ±0.5
Angle ±0.3'

3RD. ANGEL'S | UNITS MM

DRAWN BY: Jack Lu	DATE 10/22/26	MAT'L	
CHECKED BY: Jacky Chen	DATE 10/22/26	FINISH	
APPROVED BY: Tony Kao	DATE 10/22/26	SCALE 1 : 1	SHEET NO. 1 of 1

TITLE	CONNECTOR
MODLE	USB4.0 TYPE CF SMT-DIP CL1.68 L9.87 GEN 3X2 40G
DWG NO.	SBC-240S46-45x-S338
PART NO.	SBC-240S46-45x-S338
SIZE	A4
VER	R1