SUA-110V6-32x-S277

鍍層厚度：

Blank : 1u"
2 : 15u"
3 : 30u"

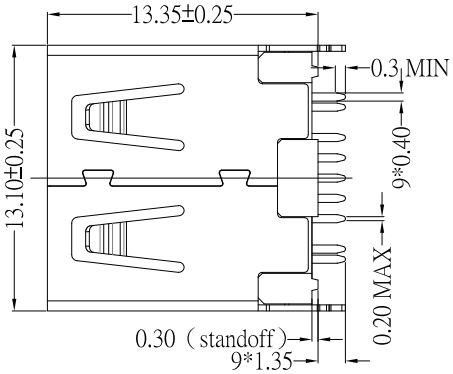

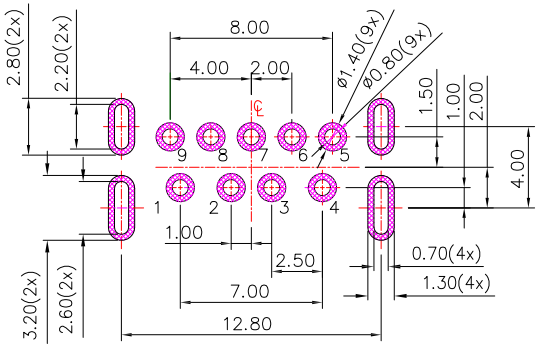

P.C.B LAYOUT MOUNTING PATTERN

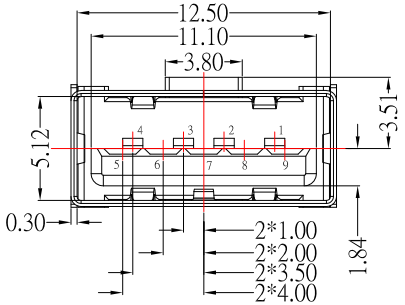

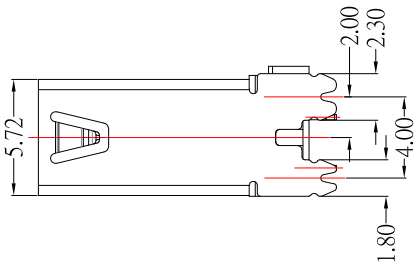

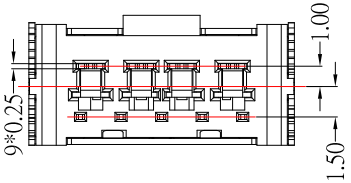

Contact Number	Signal Name
PIN1	VBUS
PIN2	D-
PIN3	D+
PIN4	GND
PIN5	StdA_SSRX-
PIN6	StdA_SSRX+
PIN7	GND_DRAIN
PIN8	StdA_SSTX-
PIN9	StdA_SSTX+
Shell	Shield

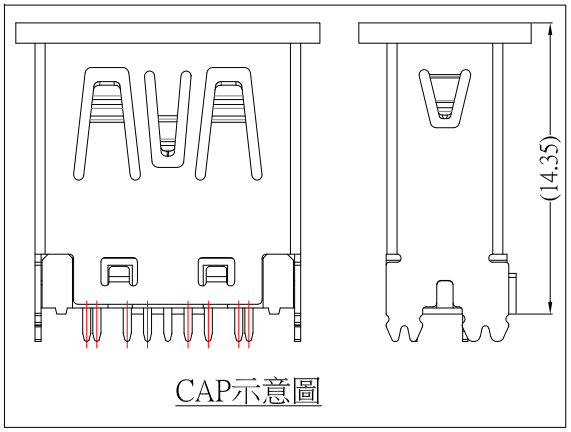

CAP示意圖

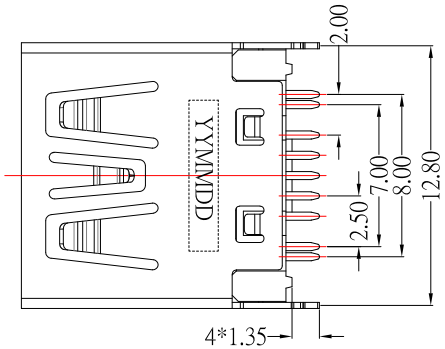

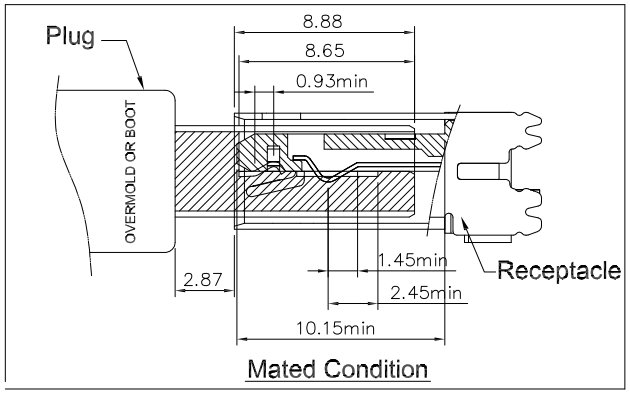

Mated Condition

1.MATERIAL:

1.1 HOUSING: LCP

1.2 CONTACT: PHOSPHOR BRONZE(4 PIN)
BRASS(5 PIN)

1.3 SHELL: SUS

2.PLATING :

2.1 CONTACT : Plated Gold in Mating Area ;
Tin Plated on Solder Balls ;
Nickel under plated overall

2.2 SHELL: Nickel under Plated surface layer

ITEM NO.	DESCRIPTION	DRAWN	DATE
1	更新CONTACT材質	Jack	050826

CONTACT 建倚科技股份有限公司
CONTACT TECHNOLOGY CORP.

TOLERANCE UNLESS OTHERWISE STATED :
Up to 5 ±0.2
Above 5 ~ 15 ±0.3
Above 15 ~ 30 ±0.4
Above 30 ~ 50 ±0.5
Angle ±0.3'

3RD. ANGEL'S | UNITS MM

DRAWN BY: Jack Lu	DATE 05/08/26	MAT'L	
CHECKED BY: Jacky Chen	DATE 05/08/26	FINISH	
APPROVED BY: Tony Kao	DATE 05/08/26	SCALE	1 : 1
		SHEET NO.	1 of 1

TITLE	CONNECTOR		
MODLE	USB A/F 180度 魚叉腳 無捲邊H:13.35mm GEN 2		
DWG NO.	SUA-110V6-32x-S277	SIZE	A4
PART NO.	SUA-110V6-32x-S277	VER	R1