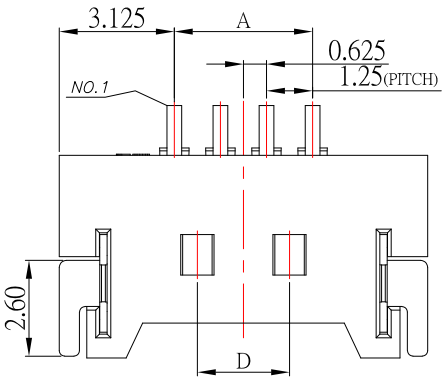

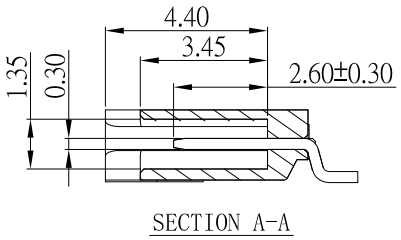

SECTION A-A

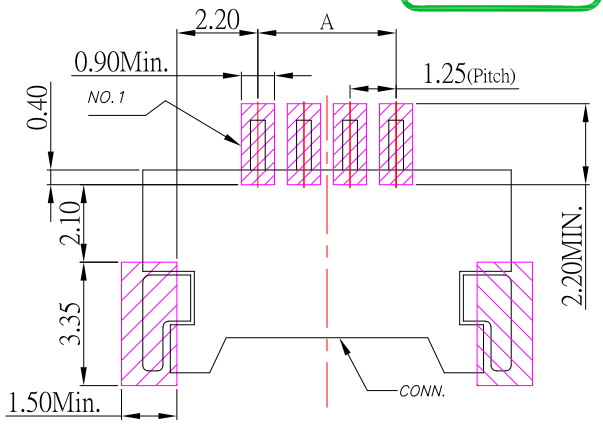

P.C.B LAYOUT

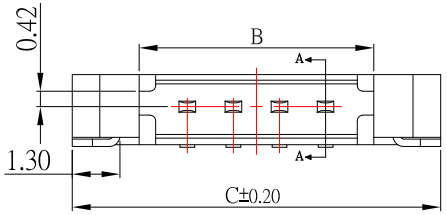

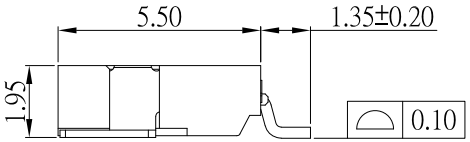

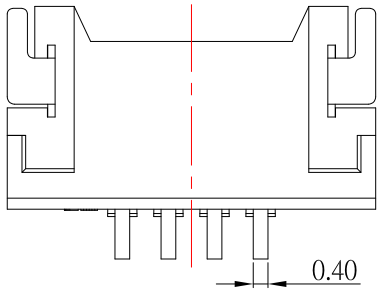

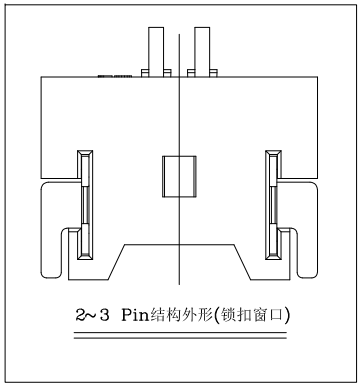

CKT	DIM A	DIM B	DIM C	DIM D
2	1.25	3.87	7.60	0
3	2.50	5.12	8.85	0
4	3.75	6.37	10.10	2.50
5	5.00	7.62	11.35	3.75
6	6.25	8.87	12.60	5.00
7	7.50	10.12	13.85	6.25
8	8.75	11.37	15.10	7.50
9	10.00	12.62	16.35	8.75
10	11.25	13.87	17.60	10.00
11	12.50	15.12	18.85	11.25
12	13.75	16.37	20.10	12.50
13	15.00	17.62	21.35	13.75
14	16.25	18.87	22.60	15.00
15	17.50	20.12	23.85	16.25
16	18.75	21.37	25.10	17.50
17	20.00	22.62	26.35	18.75
18	21.25	23.87	27.60	20.00
19	22.50	25.12	28.85	21.25
20	23.75	26.37	30.10	22.50

SPECIFICATIONS

1.Current rating : 1.0A AC , DC
2.Voltage rating : 125V AC , DC
3.Temperature rating : -40˚C ~ +85˚C
4.Insulation resistance : 100MΩ min.
5.Contact resistance : 20mΩ/Max

MATERIAL:

1.Housing : PA6T
2.Contact : Phosphor Bronze,Gold Plated
3.Leg : Brass,Tin Plated

ITEM NO.	DESCRIPTION	DRAWN	DATE
1	更新圖面	Jack	060525

CONTACT 建倚科技股份有限公司
CONTACT TECHNOLOGY CORP.

TOLERANCE UNLESS OTHERWISE STATED : Up to 5 ±0.2, Above 5 ~ 15 ±0.3, Above 15 ~ 30 ±0.4, Above 30 ~ 50 ±0.5, Angle ±0.3°
3RD. ANGEL'S
UNITS MM

DRAWN BY: Jack Lu	DATE 06/05/25	MAT'L	
CHECKED BY: Jacky Chen	DATE 06/05/25	FINISH	
APPROVED BY: Tony Kao	DATE 06/05/25	SCALE	1 : 1
		SHEET NO.	1 of 1

TITLE	CONNECTOR		
MODLE	WAFER 1.25 SMT 90度 超薄		
DWG NO.	WF-1253RSxx-S304	SIZE	A4
PART NO.	WF-1253RSxx-S304	VER	R1