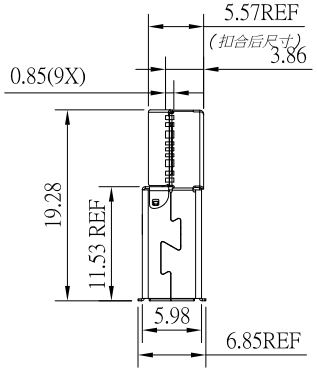

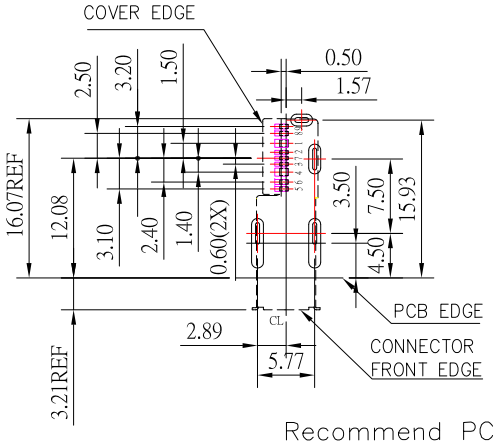

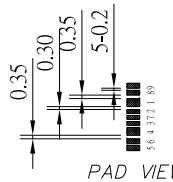

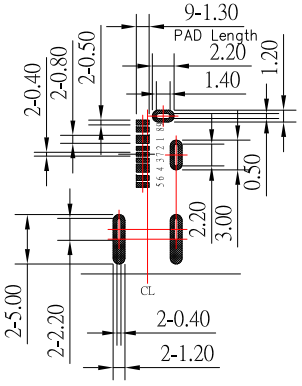

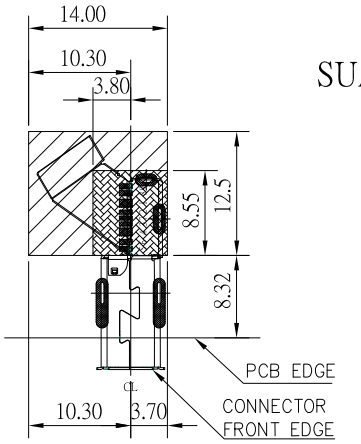

Recommend PCB Layout
Top View

扣合前留空区
扣合后留空区
焊盘区

SUA-110PS-32x-S277

鍍層厚度 :

Blank : 1u"
2 : 15u"
3 : 30u"

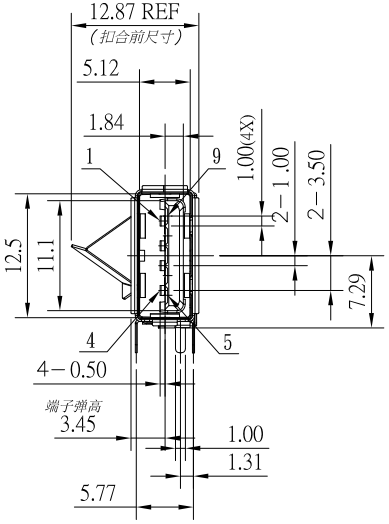

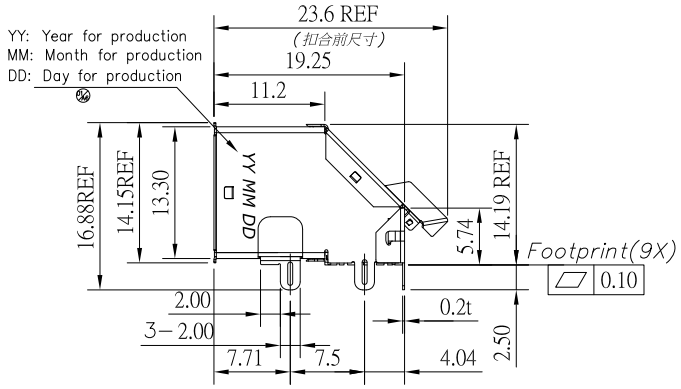

Pin No.	Signal Name
1	VBUS
2	D-
3	D+
4	GND
5	StdA_SSRX-
6	StdA_SSRX+
7	GND_DRAIN
8	StdA_SSTX-
9	StdA_SSTX+
Shell	Shield

NOTE:

1.MATERIAL:
- 1.1 HOUSING: THERMAL PLASTIC , Blue .
- 1.2 CONTACT: PHOSPHOR BRONZE.
- 1.3 SHELL: SUS.

2.Finish:
- 2.1 CONTACT: PLATED GOLD IN MATING AREA ; TIN PLATED ON SOLDER BALLS ; NICKEL UNDER PLATED OVERALL
- 2.2 SHELL: NICKEL UNDER PLATED SURFACE LAYER

3.ELECTRICAL CHARACTERISTICS:
- 3.1 CONTACTRESISTANCE: 30mΩ MAX (for pin1& pin4), 50mΩ MAX (for other contacts)
- 3.2 RATING: 1.8 A , 5V
- 3.3 DIELECTRIC WITHSTANDING VOLTAGE: 500 VDC
- 3.4 INSULATION RESISTANCE 100 MΩ MIN

4.MECHANICAL CHARACTERISTICS:
- 4.1 MATING FORCE: 35N MAX;
- 4.2 UNMATING FORCE: 10N MIN;

ITEM NO.	DESCRIPTION	DRAWN	DATE
1	調整尺寸標示位置	Jack	113021

CONTACT 建倚科技股份有限公司
CONTACT TECHNOLOGY CORP.

TOLERANCE UNLESS OTHERWISE STATED : Up to 5 ±0.2; Above 5 ~ 15 ±0.3; Above 15 ~ 30 ±0.4; Above 30 ~ 50 ±0.5; Angle ±0.3°
3RD. ANGEL'S
UNITS MM

DRAWN BY: Jack Lu	DATE 11/30/21	MAT'L	
CHECKED BY: Jacky Chen	DATE 11/30/21	FINISH	
APPROVED BY: Tony Kao	DATE 11/30/21	SCALE 1 : 1	SHEET NO. 1 of 1

TITLE	CONNECTOR		
MODLE	USB A/F 短體立式 SMT GEN 2, 10G		
DWG NO.	SUA-110PS-32x-S277	SIZE	A4
PART NO.	SUA-110PS-32x-S277	VER	R1