SUA-110E15-32x-S242

鍍層厚度 :

Blank : 1u"
2 : 15u"
3 : 30u"

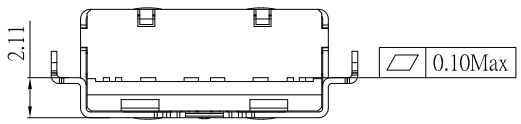

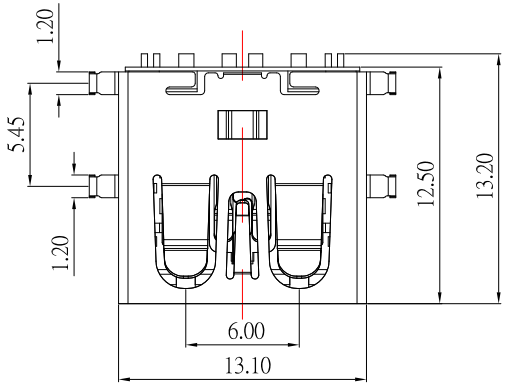

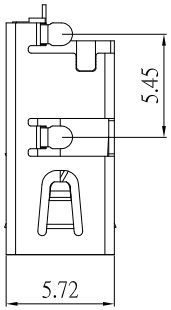

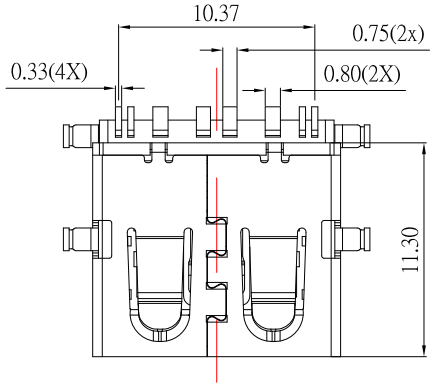

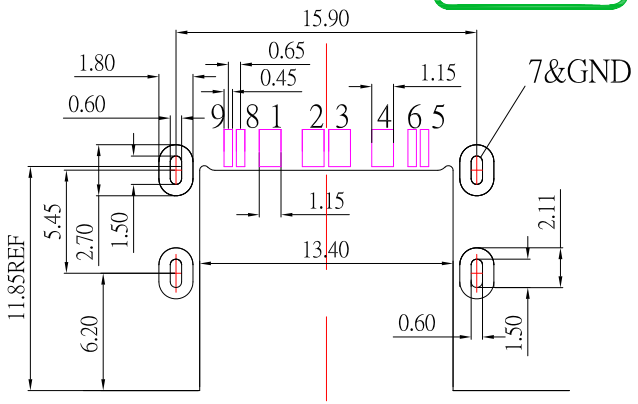

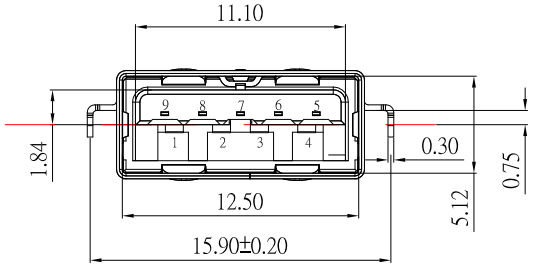

Pin NUMBER	SIGNAL NAME
1	VBUS
2	D−
3	D+
4	GND
5	StdA_SSRX−
6	StdA_SSRX+
7	GND_DRAIN
8	StdA_SSTX−
9	StdA_SSTX+
Shell	Shield

RECOMMENDED PCB LAYOUT

NOTE:

1.MATERIAL:

1.1 Housing: LCP

1.2 Contact: Phosphor Bronze

1.3 Shell: SUS

2.Finish:

2.1 Contact: Plated Gold in Mating Area ;
Tin Plated on Solder Balls ;
Nickel under plated overall

2.2 Shell: Nickel under Plated surface layer

3.SPECIFICATION:

3.1 Rate: 3.0 A

3.2 insulator Resistance:1000MΩ Min

3.3 Dielectric Strength: 500V AC

3.4 Contact Resistance: 30mΩ Max

3.5 Operation Temperature: -25˚C ~ +85˚C

3.6 Insertion Force: 35 N

3.7 Extraction Force: 10 N

ITEM NO.	DESCRIPTION	DRAWN	DATE

CONTACT 建倚科技股份有限公司
CONTACT TECHNOLOGY CORP.

TOLERANCE UNLESS OTHERWISE STATED : Up to 5 ±0.2; Above 5 ~ 15 ±0.3; Above 15 ~ 30 ±0.4; Above 30 ~ 50 ±0.5; Angle ±0.3˚

3RD. ANGEL'S | UNITS MM

DRAWN BY: Jack Lu	DATE 05/13/21	MAT'L	
CHECKED BY: Jacky Chen	DATE 05/13/21	FINISH	
APPROVED BY: Tony Kao	DATE 05/13/21	SCALE 1 : 1	SHEET NO. 1 of 1

TITLE	CONNECTOR		
MODLE	USB AF 3.0 沉板 板上H2.11mm 無捲邊 GEN 2		
DWG NO.	SUA-110E15-32x-S242	SIZE	A4
PART NO.	SUA-110E15-32x-S242	VER	R