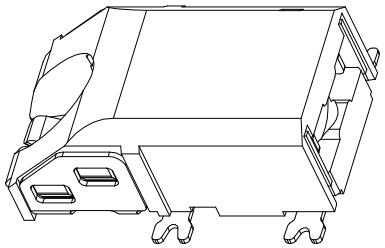

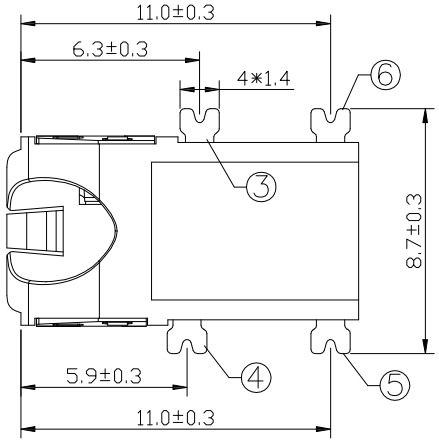


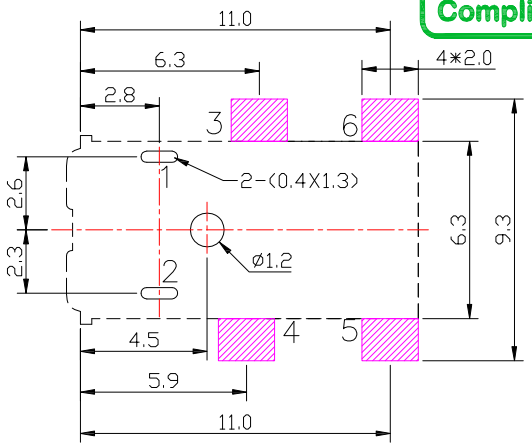


P.C.B LAYOUT
TOP VIEW

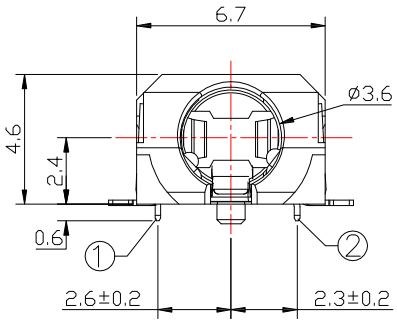


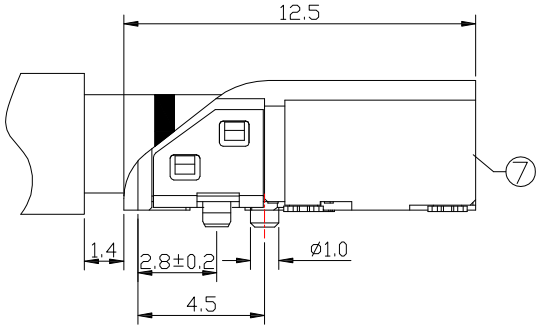


SCHEMATIC

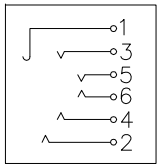


SPECIFICATION

1.Rating ：DC 30V , 1.0A；
2.Contact resistance：≤ 30mΩ；
3.Insulation resistance：≥100MΩ；
4.Withstand voltage：500VAC ；
5.Insertion and extraction force：3-30N;
6.life test：5,000 cycles。

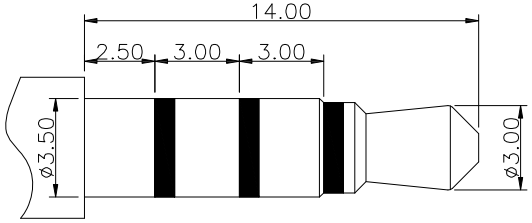


ø3.50mm 4 POLE PLUG

| NO. | DESCRIPTION | QTY | MATERIAL | PLATING |
|---|---|---|---|---|
| 7 | HOUSING | 1 | LCP | |
| 6 | 6# CONTACT FOOT | 1 | PHOSPHOR BRONZE | Au-Plating |
| 5 | 5# CONTACT FOOT | 1 | PHOSPHOR BRONZE | Au-Plating |
| 4 | 4# CONTACT FOOT | 1 | PHOSPHOR BRONZE | Au-Plating |
| 3 | 3# CONTACT FOOT | 1 | PHOSPHOR BRONZE | Au-Plating |
| 2 | 2# CONTACT FOOT | 1 | PHOSPHOR BRONZE | Au-Plating |
| 1 | 1# CONTACT FOOT | 1 | PHOSPHOR BRONZE | Au-Plating |

| ITEM NO. | DESCRIPTION | DRAWN | DATE |
|---|---|---|---|
| | | | |

建倚科技股份有限公司
CONTACT TECHNOLOGY CORP.

TOLERANCE UNLESS OTHERWISE STATED : Up to 5 ±0.2; Above 5 ~ 15 ±0.3; Above 15 ~ 30 ±0.4; Above 30 ~ 50 ±0.5; Angle ±0.3°

3RD. ANGEL'S | UNITS MM

| | | | | | | | |
|---|---|---|---|---|---|---|---|
| DRAWN BY: Jack Lu | DATE 01/15/19 | MAT'L | | TITLE | JACK | | |
| CHECKED BY: Jacky Chen | DATE 01/15/19 | FINISH | | MODLE | PHONE JACK | | |
| APPROVED BY: Tony Kao | DATE 01/15/19 | SCALE | 1 : 1 | DWG NO. | PJ-S3214-S124 | SIZE | A4 |
| | | SHEET NO. | 1 of 1 | PART NO. | PJ-S3214-S124 | VER | R |