IP67

RoHS Compliant

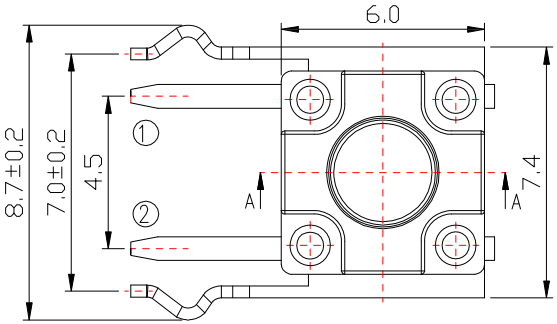

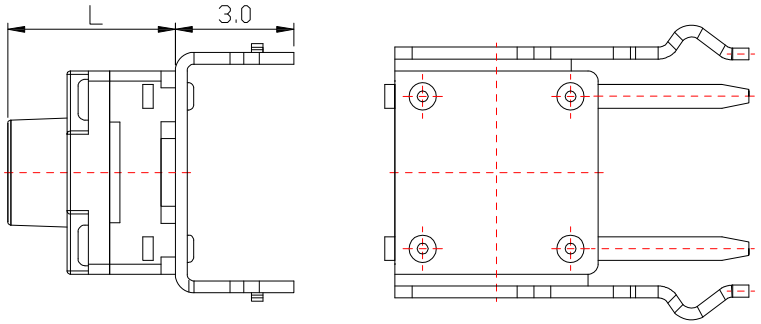

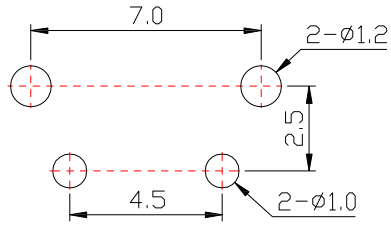

P.C.B MOUNTING PATTERN DIMENSION

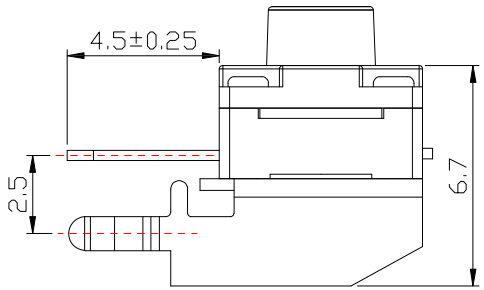

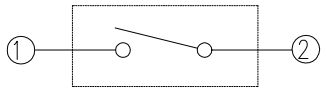

CIRCUIT DIAGRAM

SPECIFICATIONS

Rating	DC 12V 50mA Max.			
Contact Resistance	50mΩ Max.			
Travel	0.30 ± 0.10 mm			
Operating Force	2	180 ± 50gf	3	230 ± 50gf
Operating Life (cycles)	100,000			

MODEL NO.	TS-A20WV1	TS-A20WV1A	TS-A20WV1Q	TS-A20WV1QL	TS-A20WV1B	TS-A20WV1C	TS-A20WV1CL	TS-A20WV1DL	TS-A20WV1D	TS-A20WV1Y	TS-A20WV1W	TS-A20WV1WL	TS-A20WV1FL	TS-A20WV1K
L (mm)	4.30	5.00	6.00	6.50	7.00	8.00	8.50	9.00	9.50	10.00	11.00	11.50	12.00	13.00

ITEM	PART NAME	Q'TY/EA	MATERIAL	FINISH
8	WATERPROOF2	1	PE	/
7	WATERPROOF1	1	SILICONE RUBBER	WHITE
6	bracket	1	BRASS	PLATING Sn
5	SPRING	1	STAINLESS STEEL	PLATING SILVER
4	BUTTON	1	PA66	BLACK
3	COVER	1	PA66	BLACK
2	CONTACT	1	BRASS	PLATING SILVER
1	HOUSING	1	PPA	BLACK

ITEM NO.	DESCRIPTION	DRAWN	DATE

CONTACT 建倚科技股份有限公司
CONTACT TECHNOLOGY CORP.

TOLERANCE UNLESS OTHERWISE STATED : Up to 5 ±0.2; Above 5 ~ 15 ±0.3; Above 15 ~ 30 ±0.4; Above 30 ~ 50 ±0.5; Angle ±0.3°

3RD. ANGEL'S | UNITS MM

DRAWN BY: Jack Lu	DATE 06/29/21	MAT'L	
CHECKED BY: Jacky Chen	DATE 06/29/21	FINISH	
APPROVED BY: Tony Kao	DATE 06/29/21	SCALE 1 : 1	SHEET NO. 1 of 1

TITLE	SWITCH		
MODLE	TACT SWITCH 90度 DIP 防水IP67		
DWG NO.	TS-A20WV1x-x-S360	SIZE	A4
PART NO.	TS-A20WV1x-x-S360	VER	R