SBC-160S2BH-20xx-S410

鍍層厚度 :

Blank : 1u"
1 : 3u"
2 : 15u"
3 : 30u"

Housing Color :

Black : Blank
White : W

PIN ASSIGNMENTS

A1	GND	B12	GND
A2		B11	
A3		B10	
A4	VBUS	B9	VBUS
A5	CC1	B8	SBU2
A6	DP1	B7	DN2
A7	DN1	B6	DP2
A8	SBU1	B5	CC2
A9	VBUS	B4	VBUS
A10		B3	
A11		B2	
A12	GND	B1	GND
PIN	SIGNAL NAME	PIN	SIGNAL NAME

RoHS Compliant

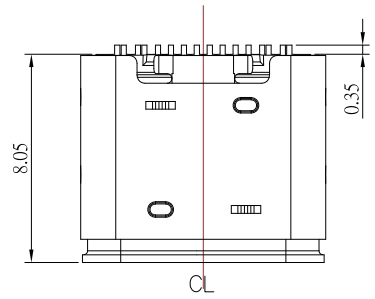

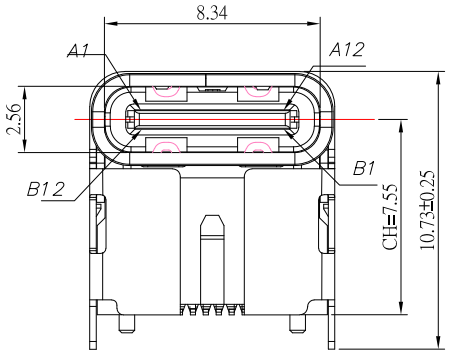

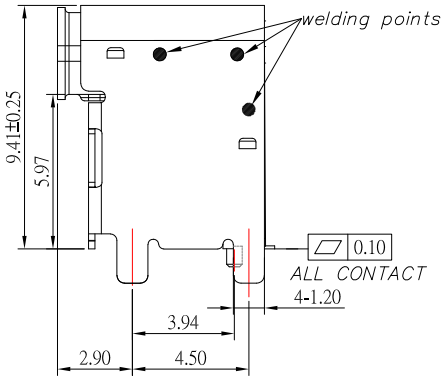

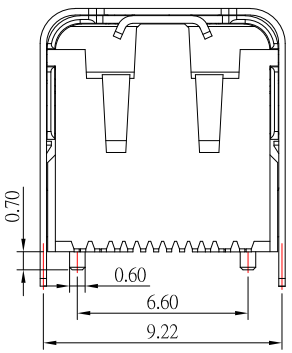

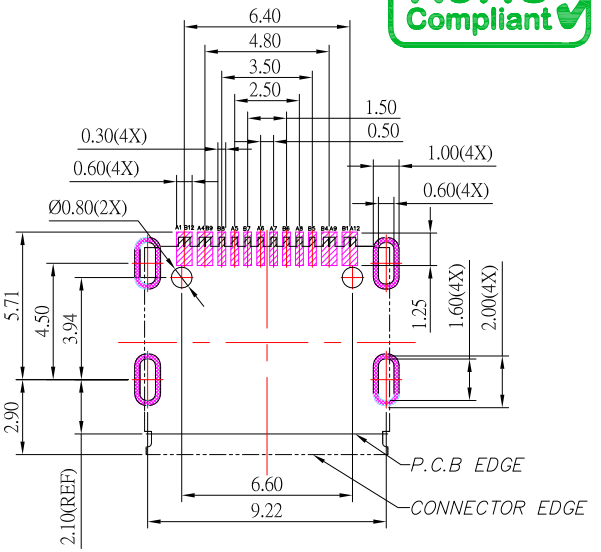

RECOMMENDED P.C.B. LAYOUT

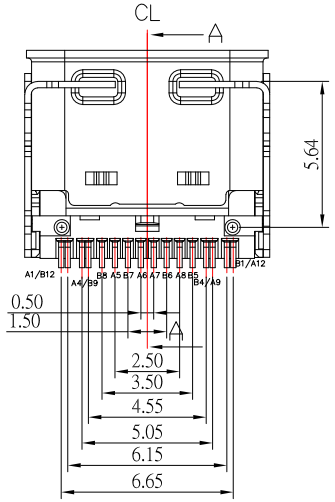

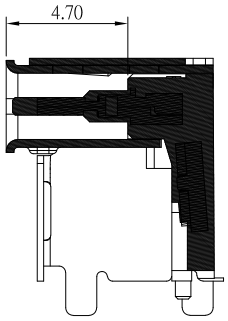

SECTION: A-A

SPECIFICATIONS

Electrical:

1.Rating: 5.0 A

2.Voltage: 20.0V

3.Dielectric Withstand Voltage: 100V AC

4.Contact Resistance: 40 mΩ Max

5.Insulation Resistance: 100 MΩ Min

Mechanical:

1.Connector Mate and Unmate Force

1.1 Mate force: 5~20 N

1.2 Unmate force: 8~20 N

Material:

1.Housing: LCP

2.Contact: C7025

3.Shell: SUS

Finish:

1.Contact: Plated Gold in Mating Area ;
Tin Plated on Solder Balls ;
Nickel under plated overall

2.Shell: Nickel under Plated surface layer

ITEM NO.	DESCRIPTION	DRAWN	DATE
6	新增尺寸	Jack	061726
5	新增尺寸	Jack	033023
4	更新Voltage: 20.0V	Jack	112322
3	新增顏色選項	Jack	100422
2	更新樣式	Jack	063022
1	更新樣式及尺寸	Jack	051221

CONTACT 建倚科技股份有限公司
CONTACT TECHNOLOGY CORP.

TOLERANCE UNLESS OTHERWISE STATED :
Up to 5 ±0.2
Above 5 ~ 15 ±0.3
Above 15 ~ 30 ±0.4
Above 30 ~ 50 ±0.5
Angle ±0.3°

3RD. ANGEL'S | UNITS MM

DRAWN BY: Jack Lu	DATE 06/17/26	MAT'L	
CHECKED BY: Jacky Chen	DATE 06/17/26	FINISH	
APPROVED BY: Tony Kao	DATE 06/17/26	SCALE 1 : 1	SHEET NO. 1 of 1

TITLE	CONNECTOR
MODLE	USB 3.1 TYPE C 單排SMT墊高7.55 L 8.0mm 高導電銅
DWG NO.	SBC-160S2BH-20xx-S410
PART NO.	SBC-160S2BH-20xx-S410
SIZE	A4
VER	R6