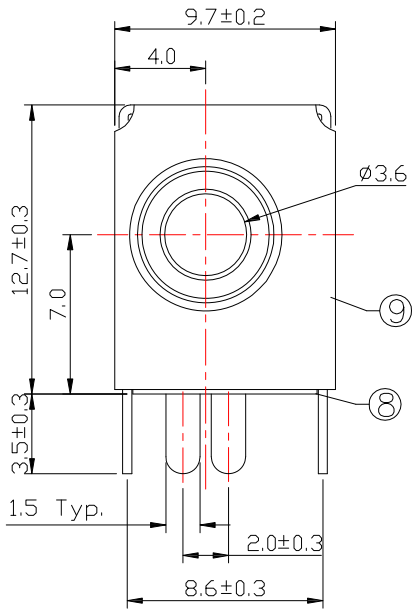

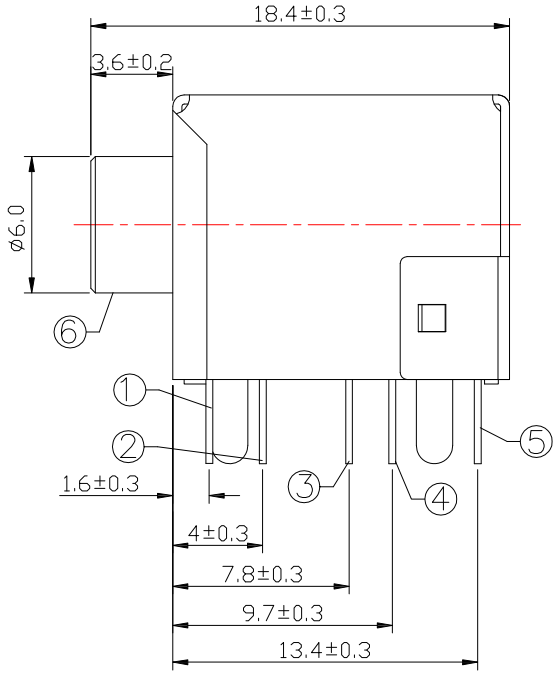

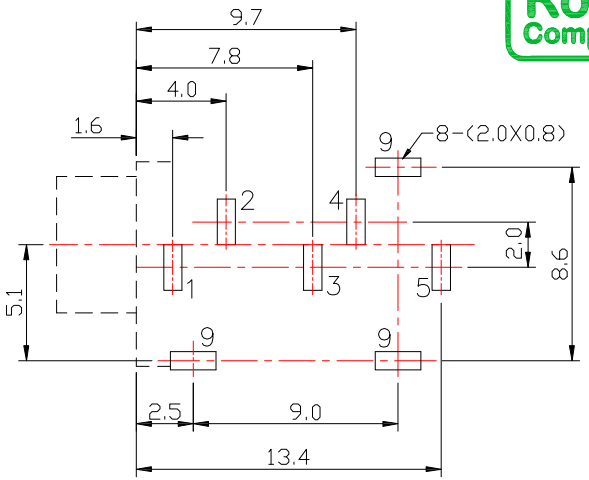

P.C.B LAYOUT
TOP VIEW

SCHEMATIC

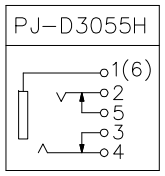

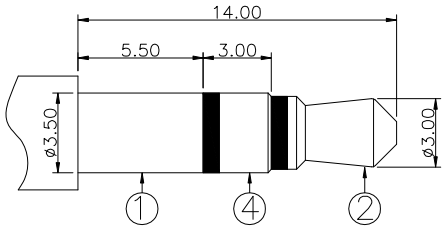

ø3.50mm 3 POLE PLUG

SPECIFICATION

1.Rating ：DC 30V, 0.5A

2.Contact resistance：≤30mΩ

3.Insulation resistance：≥100MΩ

4.Withstand voltage：500VAC

5.Insertion and extraction force：3-20N

6.life test：5,000 cycles

NO.	DESCRIPTION	QTY	MATERIAL	PLATING
9	COAT	1	IRON	Ni-Plating
8	COVER	1	PBT	
7	HOUSING	1	PBT	
6	AXIS SUPPORT	1	BRASS	Ni-Plating
5	CURVE PIECE	1	BRASS	Sn-Plating
4	SPRING PIECE	1	PHOSPHOR BRONZE	Sn-Plating
3	CURVE PIECE	1	BRASS	Sn-Plating
2	SPRING PIECE	1	PHOSPHOR BRONZE	Sn-Plating
1	FLAT PIECE	1	BRASS	Sn-Plating

ITEM NO.	DESCRIPTION	DRAWN	DATE
1	更新尺寸公差	Jack	092419

CONTACT 建倚科技股份有限公司
CONTACT TECHNOLOGY CORP.

TOLERANCE UNLESS OTHERWISE STATED : Up to 5 ±0.2, Above 5 ~ 15 ±0.3, Above 15 ~ 30 ±0.4, Above 30 ~ 50 ±0.5, Angle ±0.3°

3RD. ANGEL'S | UNITS MM

DRAWN BY: Jack Lu	DATE 09/24/19	MAT'L	
CHECKED BY: Jacky Chen	DATE 09/24/19	FINISH	
APPROVED BY: Tony Kao	DATE 09/24/19	SCALE 1 : 1	SHEET NO. 1 of 1

TITLE	JACK		
MODLE	3.5 PHONE JACK		
DWG NO.	PJ-D3055H-S124	SIZE	A4
PART NO.	PJ-D3055H-S124	VER	R1