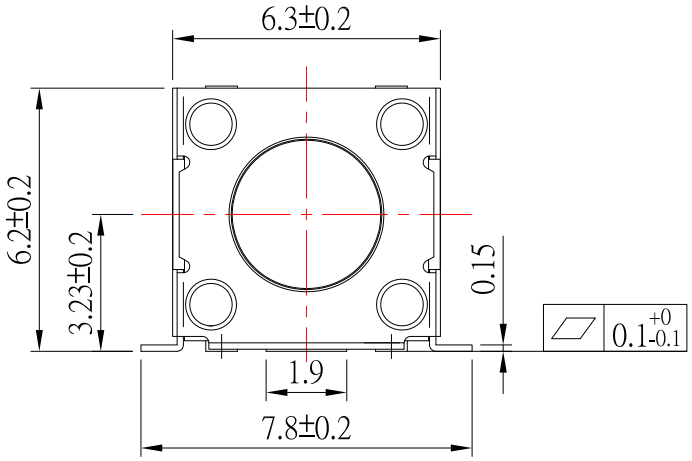

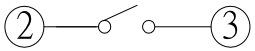

CIRCUIT DIAGRAM

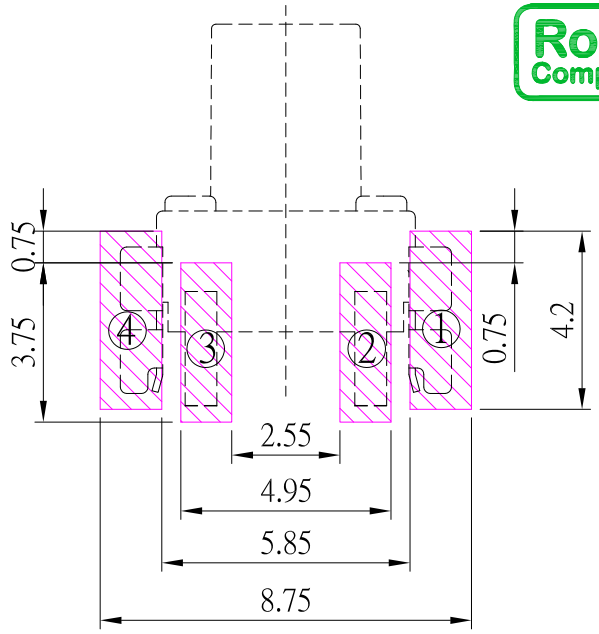

P.C.B LAYOUT

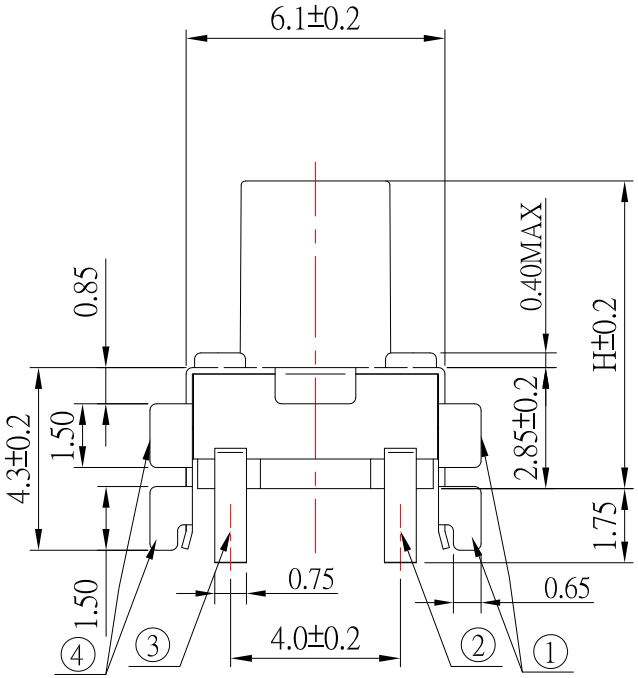

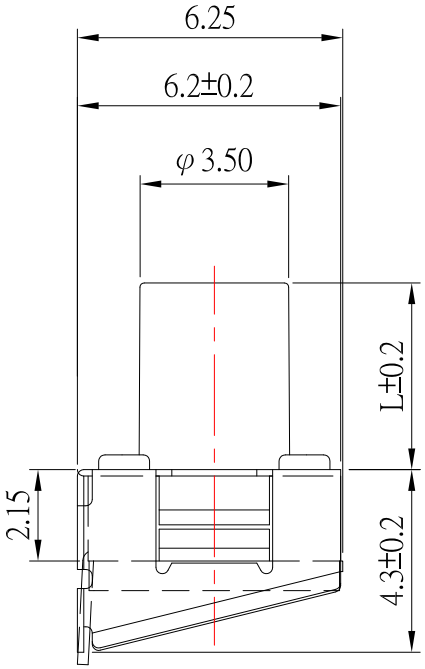

MODEL NO.	TS-A58VS1	TS-A58VS1B
L (mm)	4.40	2.30
H (mm)	7.25	5.15

SPECIFICATIONS

Rating	DC 12V 50mA							
Contact Resistance	100mΩ Max.							
Travel	035±0.15mm							
Operating Force	2	160± 50gf	3	250± 50gf	4	320± 50gf	5	400± 50gf
Operating Life (cycles)	50,000				30,000			

ITEM NO.	DESCRIPTION	DRAWN	DATE
4	新增平整度標示	Jack	110623
3	新增PCB LAYOUT中零件外型	Jack	091222
2	更新腳位編號	Jack	092220
1	更新尺寸選項	Jack	022720

CONTACT 建倚科技股份有限公司
CONTACT TECHNOLOGY CORP.

TOLERANCE UNLESS OTHERWISE STATED : Up to 5 ±0.2; Above 5 ~ 15 ±0.3; Above 15 ~ 30 ±0.4; Above 30 ~ 50 ±0.5; Angle ±0.3°

3RD. ANGEL'S | UNITS MM

DRAWN BY: Jack Lu	DATE 11/06/23	MAT'L	
CHECKED BY: Jacky Chen	DATE 11/06/23	FINISH	
APPROVED BY: Tony Kao	DATE 11/06/23	SCALE 1 : 1	SHEET NO. 1 of 1

TITLE	SWITCH		
MODLE	TACT SWITCH 無接地腳		
DWG NO.	TS-A58VS1x-x-S138	SIZE	A4
PART NO.	TS-A58VS1x-x-S138	VER	R4