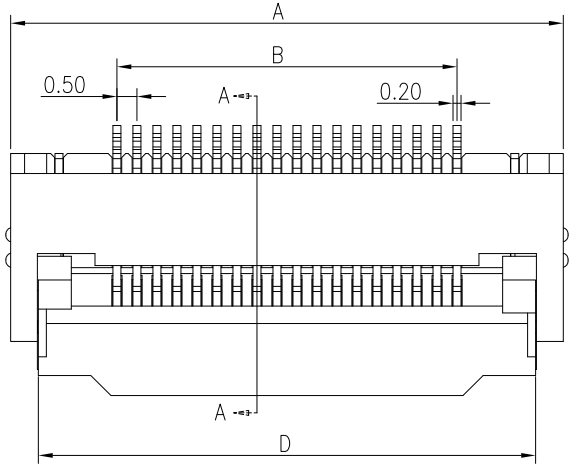

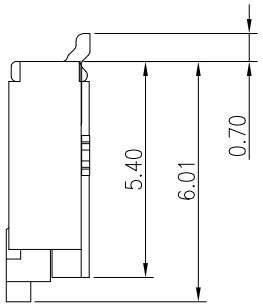

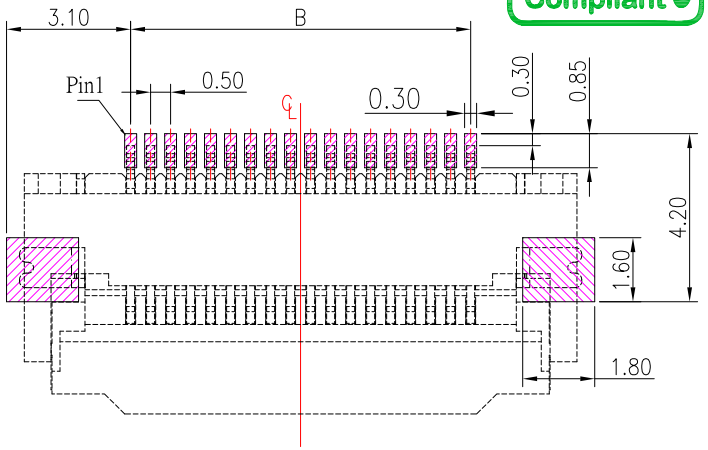

PCB LAYOUT

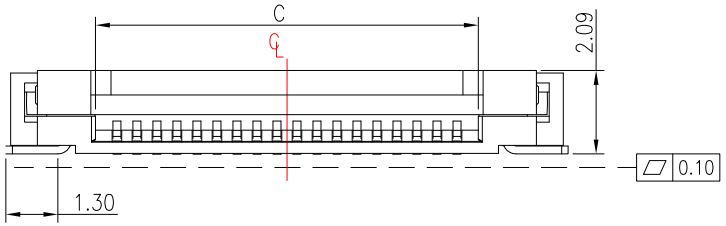

PIN	Dimensions			
	A	B	C	D
15	12.31	7.00	8.07	10.93
17	13.31	8.00	9.07	11.93
18	13.81	8.50	9.57	12.43
22	15.81	10.50	11.57	14.43
25	17.31	12.00	13.07	15.93
28	18.81	13.50	14.57	17.43
30	19.81	14.50	15.57	18.43
32	20.81	15.50	16.57	19.43
36	22.81	17.50	18.57	21.43
40	24.81	19.50	20.57	23.43
54	31.81	26.50	27.57	30.43

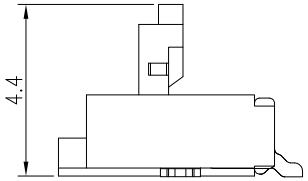

COVER OPEN STATE

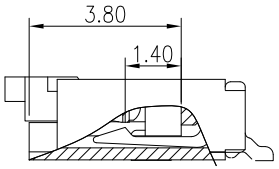

CABLE INSERT DIM.
SECTION: A–A

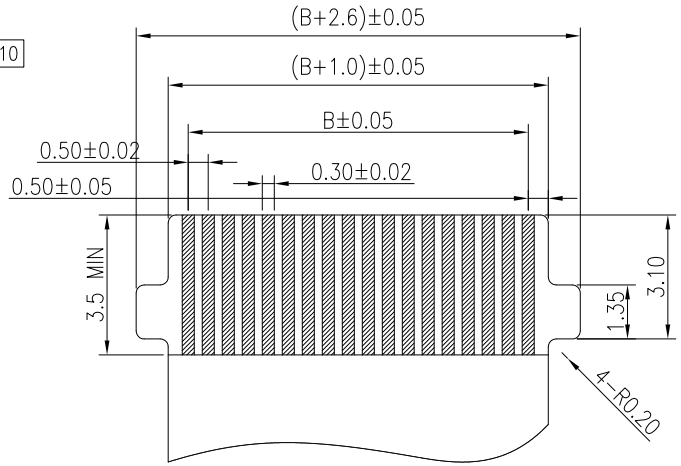

RECOMMENDED FFC SIZE
THICKNESS 0.3±0.03

NOTES:

1. MATERIAL:
   - 1.1 HOUSING: LCP,COLOR:BEIGE
   - 1.2 ACTUATOR: LCP,COLOR:BLACK
   - 1.3 CONTACT: PHOSPHOR BRONZE
   - 1.4 FITTING NAIL: BRASS
2. PLATING:
   - 2.1 CONTACT: GOLD / TIN PLATED ON NICKEL OVERALL
   - 2.2 FITTING NAIL: TIN PLATED ON NICKEL OVERALL

ITEM NO.	DESCRIPTION	DRAWN	DATE
1	更新FFC和材質PIN選項	Jack	061623

CONTACT 建倚科技股份有限公司
CONTACT TECHNOLOGY CORP.

TOLERANCE UNLESS OTHERWISE STATED: Up to 5 ±0.2; Above 5 ~ 15 ±0.3; Above 15 ~ 30 ±0.4; Above 30 ~ 50 ±0.5; Angle ±0.3°

3RD. ANGEL'S | UNITS MM

DRAWN BY: Jack Lu	DATE 06/16/23	MAT'L	
CHECKED BY: Jacky Chen	DATE 06/16/23	FINISH	
APPROVED BY: Tony Kao	DATE 06/16/23	SCALE 1 : 1	SHEET NO. 1 of 1

TITLE	CONNECTOR		
MODLE	FPC 0.5mm 掀蓋式 蝴蝶扣		
DWG NO.	FPC05L-20xx-B2-S304	SIZE	A4
PART NO.	FPC05L-20xx-B2-S304	VER	R1