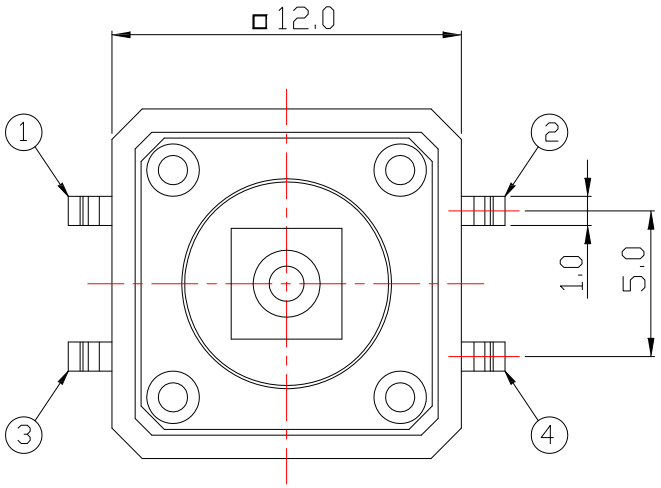


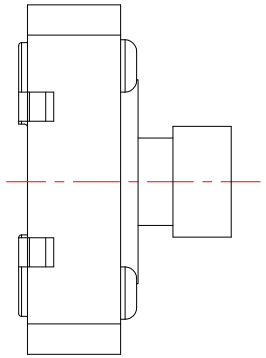

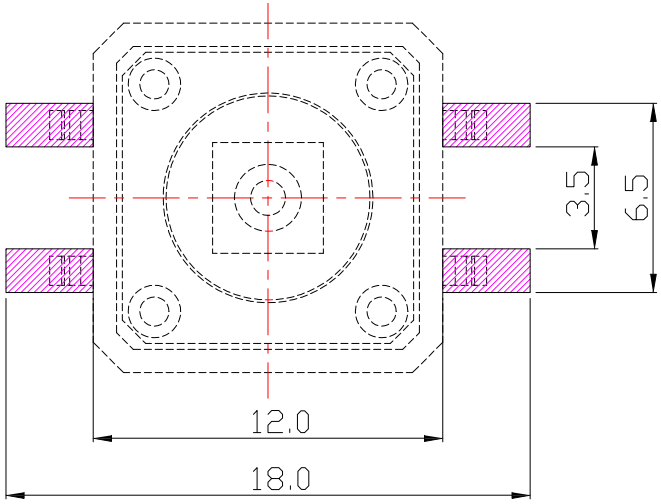


PCB LAYOUT MOUNTING PATTERN

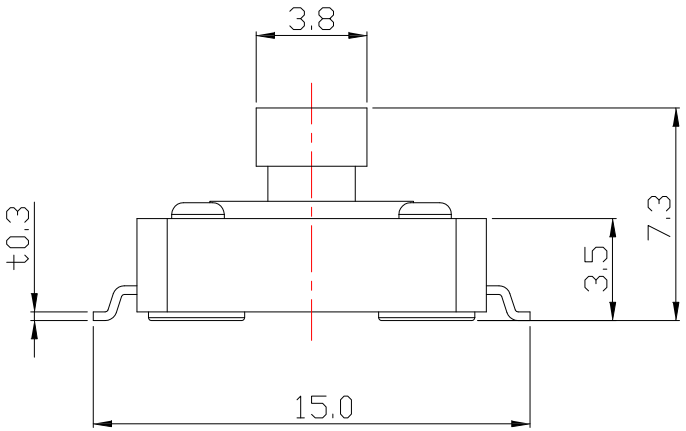


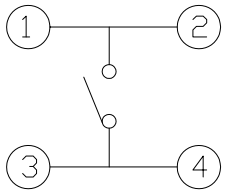


CIRCUIT DIAGRAM

## SPECIFICATIONS

| | | | | |
|---|---|---|---|---|
| Rating | DC 12V 50mA | | | |
| Contact Resistance | 100mΩ Max. | | | |
| Travel | 0.3 ± 0.1mm | | | |
| Operating Force | 2 | 160±50gf | 3 | 250±50gf |
| Operating Life(cycles) | 100,000 | | | |

| | | | | | | | | | | | |
|---|---|---|---|---|---|---|---|---|---|---|---|
| ITEM NO. | DESCRIPTION | DRAWN | DATE | CONTACT 建倚科技股份有限公司 CONTACT TECHNOLOGY CORP. | DRAWN BY: Jack Lu | DATE 01/06/16 | MAT'L | | TITLE | SWITCH | |
| | | | | | CHECKED BY: Jacky Chen | DATE 01/06/16 | FINISH | | MODLE | TACT SWITCH | |
| | | | | TOLERANCE UNLESS OTHERWISE STATED: Up to 5 ±0.2; Above 5 ~ 15 ±0.3; Above 15 ~ 30 ±0.4; Above 30 ~ 50 ±0.5; Angle ±0.3° | 3RD. ANGEL'S | UNITS MM | SCALE | 1 : 1 | DWG NO. | TS-A03ST-x-S126 | SIZE A4 |
| | | | | | APPROVED BY: Tony Kao | DATE 01/06/16 | SHEET NO. | 1 of 1 | PART NO. | TS-A03ST-x-S126 | VER R |