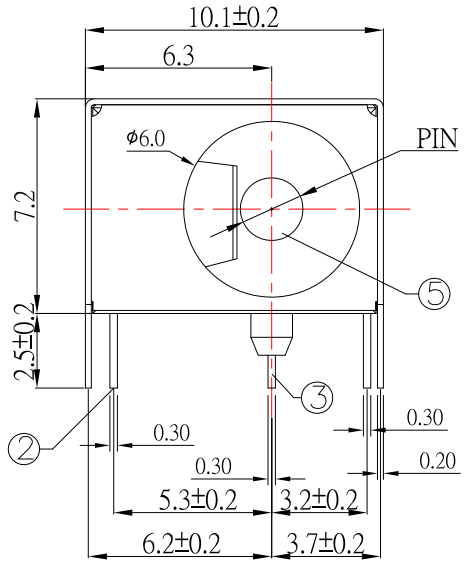

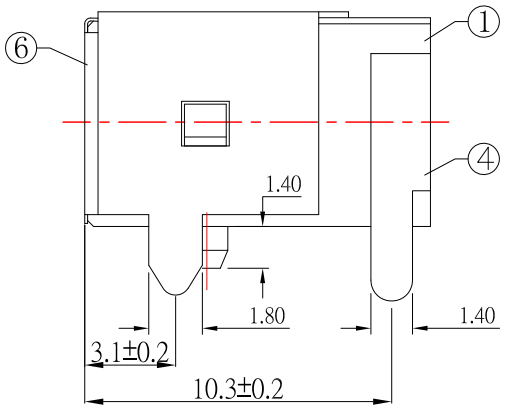

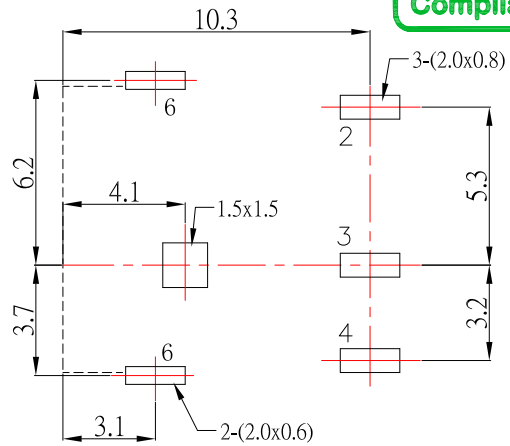

P.C.B LAYOUT
TOP VIEW

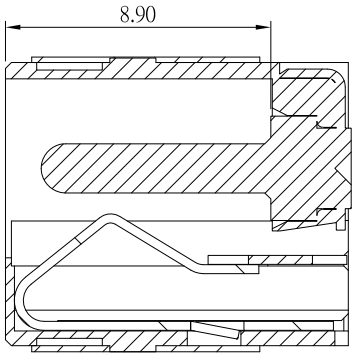

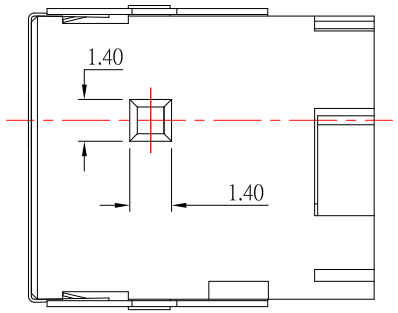

SPECIFICATION

1.Rating ：DC 20V 5.0A

2.Contact resistance：≤30mΩ

3.Insulation resistance：≥100MΩ

4.Withstand voltage：500VAC

5.Insertion and extraction force：3-30N

6.life test：10,000 cycles

MODEL NO.	DC-D044B-x
SCHEMATIC	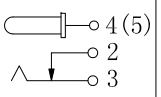
CENTER PIN(X)	ϕ1.65 mm
	ϕ2.0 mm
	ϕ2.5 mm

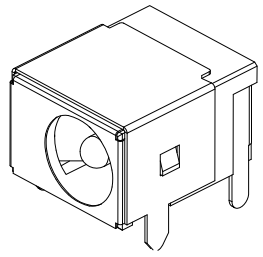

NO.	DESCRIPTION	QTY	MATERIAL	PLATING
6	COVER	1	SUS	Ni-Plating
5	PIN	1	H59	Ni-Plating
4	CONTACT FOOT	1	BRASS	Tin / Ni-Plating
3	CURVE PIECE	1	BRASS	Tin / Ni-Plating
2	SPRING PIECE	1	C17200	Tin / Ni-Plating
1	HOUSING	1	PA9T	Black

ITEM NO.	DESCRIPTION	DRAWN	DATE
1	更新圖面尺寸	Jack	042518

CONTACT 建倚科技股份有限公司
CONTACT TECHNOLOGY CORP.

TOLERANCE UNLESS OTHERWISE STATED : Up to 5 ±0.2; Above 5 ~ 15 ±0.3; Above 15 ~ 30 ±0.4; Above 30 ~ 50 ±0.5; Angle ±0.3°

3RD. ANGEL'S | UNITS | MM

DRAWN BY: Jack Lu	DATE 04/25/18	MAT'L		TITLE	JACK
CHECKED BY: Jacky Chen	DATE 04/25/18	FINISH		MODLE	DC JACK
APPROVED BY: Tony Kao	DATE 04/25/18	SCALE	1 : 1	DWG NO.	DC-D044B-x-S214
		SHEET NO.	1 of 1	PART NO.	DC-D044B-x-S214

SIZE A4 | VER R1