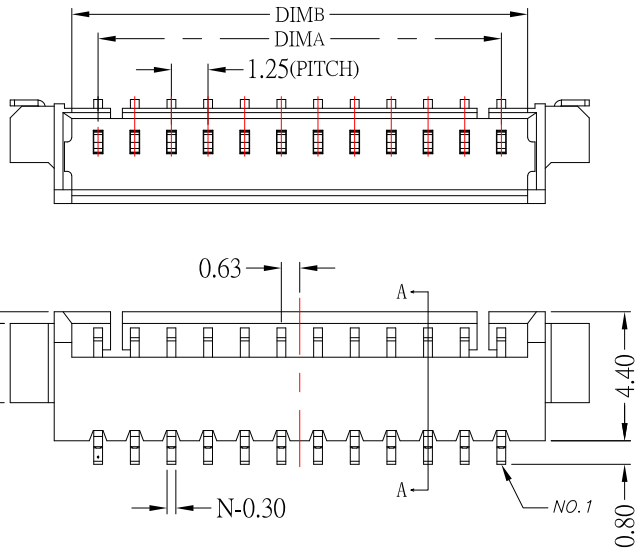

CKT	DIM A	DIM B	DIM C	DIM D
2	1.25	3.05	7.25	7.35
3	2.50	4.30	8.50	8.60
4	3.75	5.55	9.75	9.85
5	5.00	6.80	11.00	11.10
6	6.25	8.05	12.25	12.35
7	7.50	9.30	13.50	13.60
8	8.75	10.55	14.75	14.85
9	10.00	11.80	16.00	16.10
10	11.25	13.05	17.25	17.35
11	12.50	14.30	18.50	18.60
12	13.75	15.55	19.75	19.85
13	15.00	16.80	21.00	21.10
14	16.25	18.05	22.25	22.35
15	17.50	19.30	23.50	23.60
16	18.75	20.55	24.75	24.85
17	20.00	21.80	26.00	26.10
18	21.25	23.05	27.25	27.35
19	22.50	24.30	28.50	28.60
20	23.75	25.55	29.75	29.85

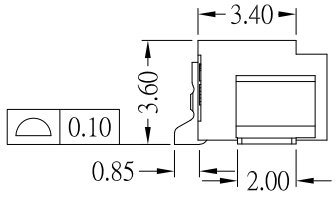

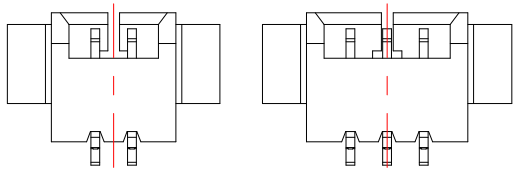

LOCK CONFIGURATION（锁扣位置）

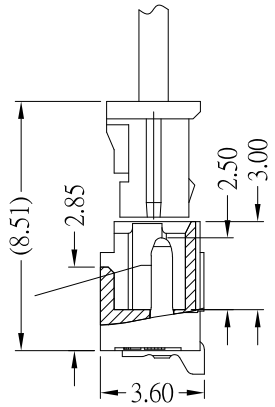

SECTION A-A

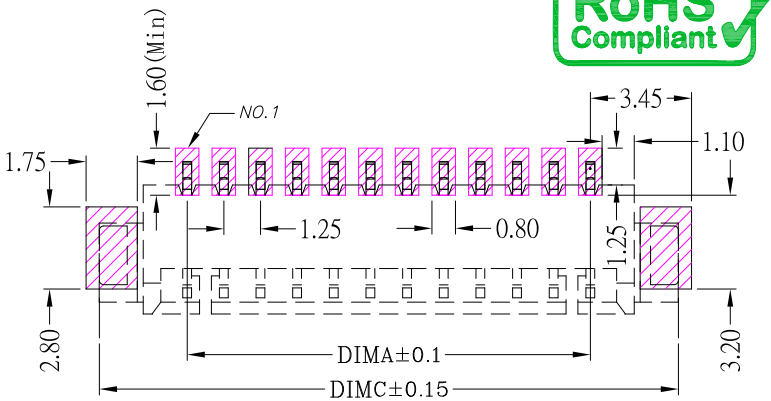

RECOMMENDED P.C.B LAYOUT

1.Material
- 1.1: Housing: LCP , Color:Nature.
- 1.2: Contact: BRASS
- 1.3: LEG: BRASS

2.Plating
- 2.1: Contact: Tin over Nickel.
- 2.2: LEG: Tin over Nickel.

3.Rating:
- 3.1: CURRENT RATING: 1.0A
- 3.2: VOLTAGE RATING: 125V AC
- 3.3 OPERATING TEMPERATURE: -40℃～+85℃

ITEM NO.	DESCRIPTION	DRAWN	DATE
9	更新Contact材質	Jack	102424
8	更新PCB LAYOUT	Jack	102723
7	更新PIN樹選項	Jack	070523
6	更新圖面	Jack	040919

CONTACT 建倚科技股份有限公司
CONTACT TECHNOLOGY CORP.

TOLERANCE UNLESS OTHERWISE STATED : Up to 5 ± 0.2; Above 5 ~ 15 ± 0.3; Above 15 ~ 30 ± 0.4; Above 30 ~ 50 ± 0.5; Angle ± 0.3

3RD. ANGEL'S | UNITS | MM

DRAWN BY: Jack Lu	DATE 10/24/24	MAT'L	
CHECKED BY: Jacky Chen	DATE 10/24/24	FINISH	
APPROVED BY: Tony Kao	DATE 10/24/24	SCALE 1 : 1	SHEET NO. 1 of 1

TITLE	CONNECTOR		
MODLE	WAFER P : 1.25mm SMT 90度		
DWG NO.	WF-1250RSxx-S304	SIZE	A4
PART NO.	WF-1250RSxx-S304	VER	R9