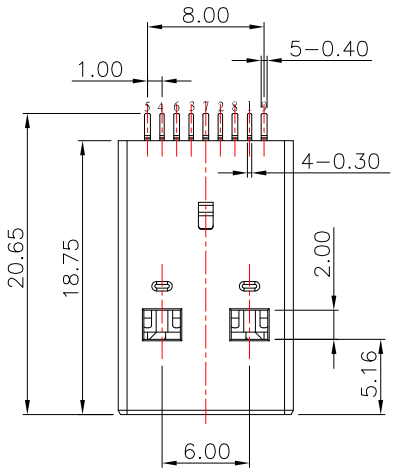


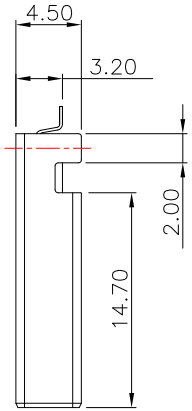


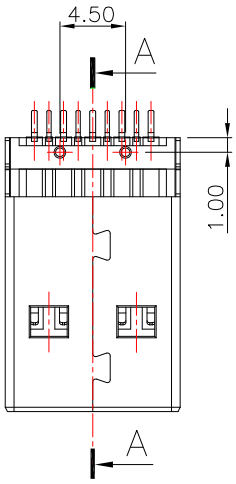


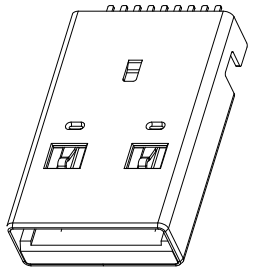

RoHS Compliant

# SUA-111M3-30x-S277

鍍層厚度 :

| |
|---|
| Blank : 1u" |
| 2 : 15u" |
| 3 : 30u" |

| Pin NO. | SIGNAL NAME |
|---|---|
| 1 | VBUS |
| 2 | D− |
| 3 | D+ |
| 4 | GND |
| 5 | StdA_SSRX− |
| 6 | StdA_SSRX+ |
| 7 | GND_DRAIN |
| 8 | StdA_SSTX− |
| 9 | StdA_SSTX+ |
| Shell | Shield |

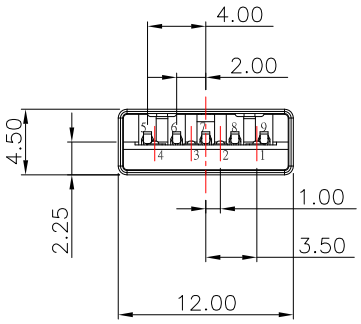


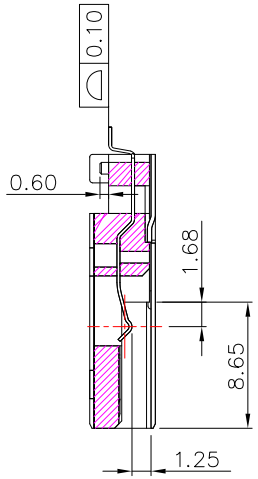


SECTION "A-A"

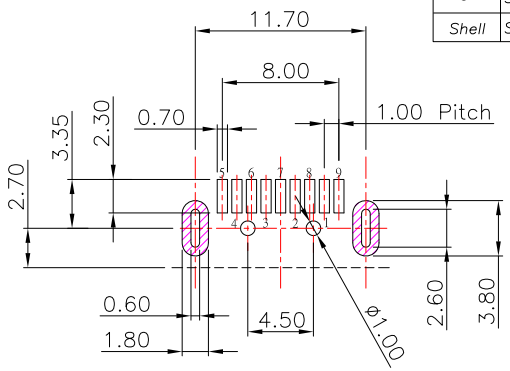


P.C.B LAYOUT MOUNTING PATTERN

NOTE:

1.MATERIAL:

1.1 INSULATOR: LCP, UL 94V-0,Blue

1.2 CONTACT: PHOSPHOR BRONZE

1.3 SHELL: SPCC

2.PLATING:

2.1 CONTACT: Plated Gold in Mating Area ;
Tin Plated on Solder Balls ;
Nickel under plated overall

2.2 SHELL: Nickel under Plated surface layer

3.ELECTRICAL CHARACTERISTICS;

3.1 CURRENT RATING: 1.5 Ampere Min

3.2 VOLTAGE: 30VAC(R.M.S)

3.3 CONTACT RESISTANCE: 30mΩ MAXIMUM

3.4 DIELECTRIC WITHSTANDING VOLTAGE: 500 VAC

3.5 INSULATION RESISTANCE 100 MΩ MIN

3.6 ENVIRONMENTAL: -55°C ～ 105°C

| ITEM NO. | DESCRIPTION | DRAWN | DATE |
|---|---|---|---|
| 1 | 新增PIN Define | Jack | 062123 |

CONTACT 建倚科技股份有限公司
CONTACT TECHNOLOGY CORP.

TOLERANCE UNLESS OTHERWISE STATED : Up to 5 ±0.2; Above 5 ~ 15 ±0.3; Above 15 ~ 30 ±0.4; Above 30 ~ 50 ±0.5; Angle ±0.3°

3RD. ANGEL'S | UNITS MM

| | | | |
|---|---|---|---|
| DRAWN BY: Jack Lu | DATE 06/21/23 | MAT'L | |
| CHECKED BY: Jacky Chen | DATE 06/21/23 | FINISH | |
| APPROVED BY: Tony Kao | DATE 06/21/23 | SCALE 1 : 1 | SHEET NO. 1 of 1 |

| | | | |
|---|---|---|---|
| TITLE | CONNECTOR | | |
| MODLE | USB AM 3.0 沉板3.2mm L18.7mm | | |
| DWG NO. | SUA-111M3-30x-S277 | SIZE | A4 |
| PART NO. | SUA-111M3-30x-S277 | VER | R1 |