IPX7

RoHS Compliant

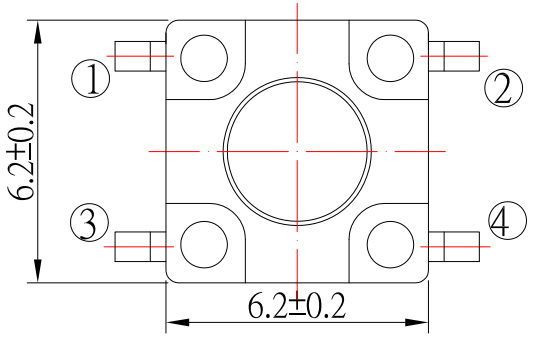

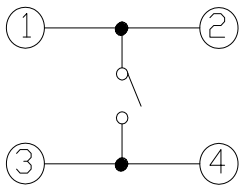

CIRCUIT DIAGRAM

KNOB HEIGH

Model	H(mm)
TS-A20WS	4.3
TS-A20WSA	5.0
TS-A20WSAL	5.5
TS-A20WSQ	6.0
TS-A20WSQL	6.5
TS-A20WSB	7.0
TS-A20WSR	7.5
TS-A20WSC	8.0
TS-A20WSCL	8.5
TS-A20WSD	9.5
TS-A20WSDL	10.0
TS-A20WSFL	12.0
TS-A20WSK	13.0

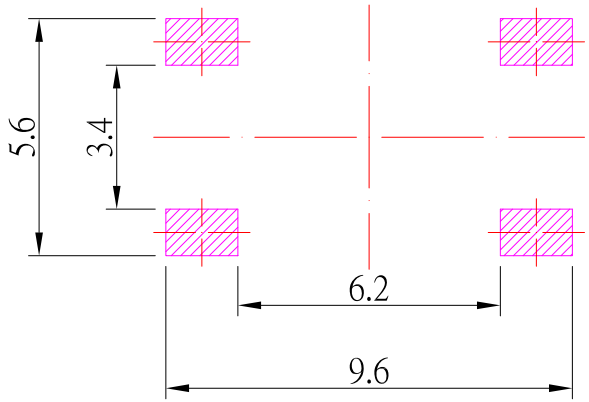

P.C.B LAYOUT

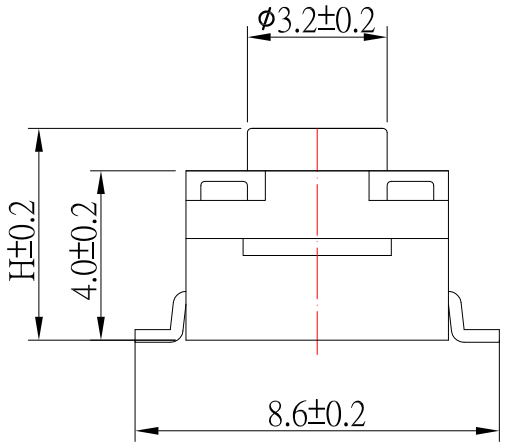

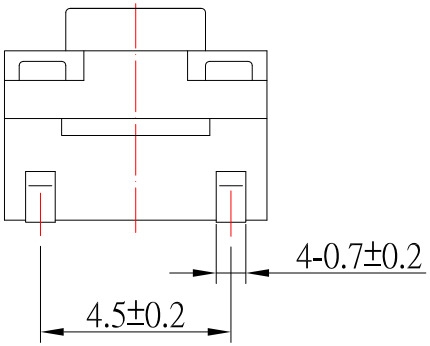

SPECIFICATIONS

Rating	DC 12V 50mA Max.			
Contact Resistance	100mΩ Max.			
Travel	0.25 ± 0.10 mm			
Operating Force	2	180 ± 50gf	3	250 ± 50gf
Operating Life (cycles)	50,000			

NO	PART NAME	QTY	MATERIAL	REMARK
6	RUBBER	1	SILICON	
5	TERMINAL	1	H65	Ag plating
4	HOUSING	1	PPA	——
3	CONTACT FORM	1	SUS	Ag plating
2	COVER	1	PPA	
1	STEM	1	PPA	

ITEM NO.	DESCRIPTION	DRAWN	DATE
6	新增尺寸公差	Jack	030723
5	新增高選項	Jack	020323
4	更新尺寸和新增材質表	Jack	091922
3	新增高選項	Jack	112521
2	新增IPX7標示	Jack	071321
1	新增高選項	Jack	032320

CONTACT 建倚科技股份有限公司 CONTACT TECHNOLOGY CORP.

TOLERANCE UNLESS OTHERWISE STATED : Up to 5 ±0.2; Above 5 ~ 15 ±0.3; Above 15 ~ 30 ±0.4; Above 30 ~ 50 ±0.5; Angle ±0.3°

3RD. ANGEL'S | UNITS MM

DRAWN BY: Jack Lu	DATE 03/07/23	MAT'L	
CHECKED BY: Jacky Chen	DATE 03/07/23	FINISH	
APPROVED BY: Tony Kao	DATE 03/07/23	SCALE 1 : 1	SHEET NO. 1 of 1

TITLE	SWITCH		
MODLE	防水型 TACT SWITCH SMT TYPE		
DWG NO.	TS-A20WSx-x-S138	SIZE	A4
PART NO.	TS-A20WSx-x-S138	VER	R6