

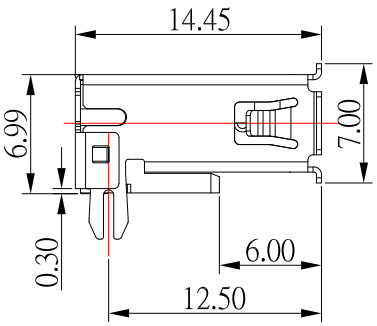

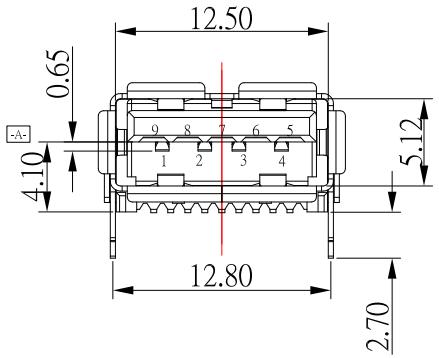

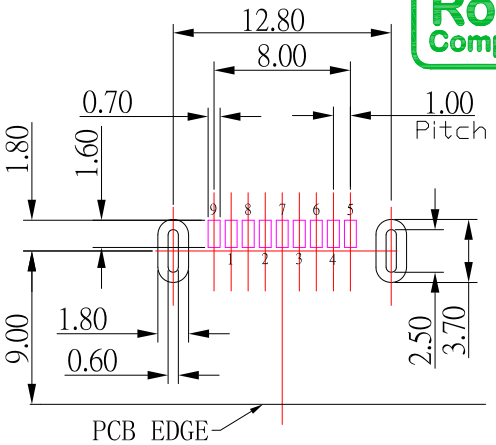

RECOMMENDED PCB LAYOUT

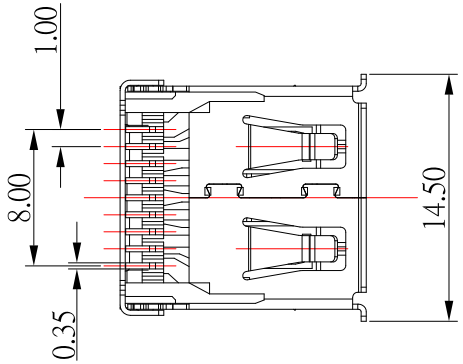

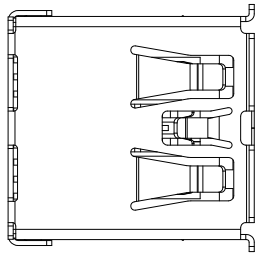

Pin NUMBER	SIGNAL NAME
1	VBUS
2	D-
3	D+
4	GND
5	StdA_SSRX-
6	StdA_SSRX+
7	GND_DRAIN
8	StdA_SSTX-
9	StdA_SSTX+
Shell	Shield

SUA-110M2-30x-S277

鍍層厚度 :

Blank : 1u"
2 : 15u"
3 : 30u"

SPECIFICATIONS:

1.MATERIAL:
- 1.1 HOUSING: LCP, UL 94V-0
- 1.2 CONTACT: PHOSPHOR BRONZE
- 1.3 SHELL: BRASS

2.PLATING:
- 2.1 TERMINAL: PLATED GOLD IN MATING AREA ;
  TIN PLATED ON SOLDER BALLS ;
  NICKEL UNDER PLATED OVERALL
- 2.2 SHELL: NICKEL UNDER PLATED SURFACE LAYER

3.ELECTRICAL CHARACTERISTICS;
- 3.1 CONTACTRESISTANCE: 30mΩ MAXIMUM
- 3.2 CONTACT CURRENT RATING: 1.5A
- 3.3 DIELECTRIC WITHSTANDING VOLTAGE: 500 V R.M.S.
- 3.4 INSULATION RESISTANCE: 1000 MΩ MIN
- 3.5 OPERATING TEMPEROTURE: -40˚C ~ 85˚C

4 MECHANICAL CHARACTERISTICS:
- 4.1 MATING FORCE: 3.57kg MAX
- 4.2 UNMATED FORCE: 1.02kg MIN
- 4.3 DURABILITY: 1500 CYCLES

ITEM NO.	DESCRIPTION	DRAWN	DATE
5	更新圖面	Jack	040722
4	新增尺寸	Jack	100518
3	更新DURABILITY	Jack	090618
2	新增尺寸	Jack	061917
1	更新樣式	Jack	091216

CONTACT 建倚科技股份有限公司
CONTACT TECHNOLOGY CORP.

TOLERANCE UNLESS OTHERWISE STATED : Up to 5 ±0.2; Above 5 ~ 15 ±0.3; Above 15 ~ 30 ±0.4; Above 30 ~ 50 ±0.5; Angle ±0.3°

3RD. ANGEL'S | UNITS MM

		DATE
DRAWN BY:	Jack Lu	04/07/22
CHECKED BY:	Jacky Chen	04/07/22
APPROVED BY:	Tony Kao	04/07/22

MAT'L		TITLE	CONNECTOR
FINISH		MODLE	USB 3.0 AF SMT本體長=14.45mm, 魚叉腳=2.70mm
SCALE	1 : 1	DWG NO.	SUA-110M2-30x-S277
SHEET NO.	1 of 1	PART NO.	SUA-110M2-30x-S277

SIZE A4 | VER R5