SUA-110H2-30x-S277

鍍層厚度：

Blank : 1u"
2 : 15u"
3 : 30u"

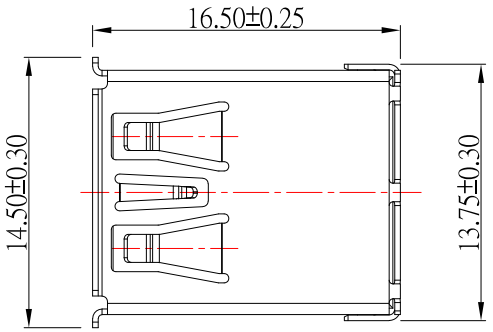

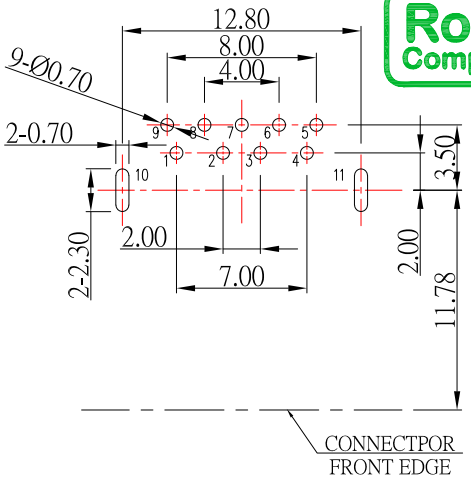

RoHS Compliant

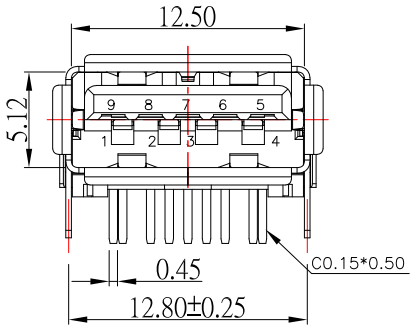

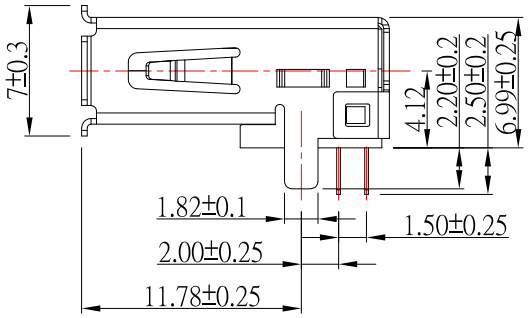

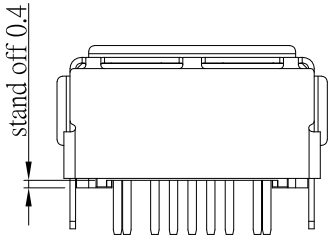

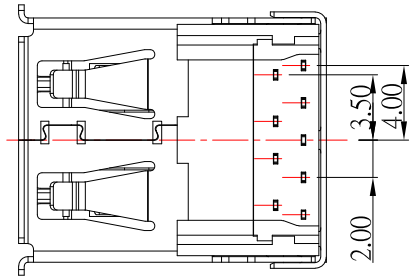

PCB LAYOUT
TOP VIEW

PIN NO.	PIN 1	PIN 2	PIN 3	PIN 4
SLGNAL NAME	V BUS	D-	D+	GND
REMARK	USB 2.0 CONTACT PINS			

PIN NO.	PIN 5	PIN 6	PIN 7	PIN 8	PIN 9
SLGNAL NAME	STDA_SSRX-	STDA_SSRX+	GND_DRAIN	STDA_SSTX-	STDA_SSTX+
REMARK	USB 3.0 CONTACT PINS				

NOTE:

1.MATERIAL:
- 1.1 Housing: LCP
- 1.2 Contact: Brass
- 1.3 Shell: Brass
- 1.4 Cover: LCP

2.Finish:
- 2.1 Contact: Plated Gold in Mating Area ;
  Tin Plated on Solder Balls ;
  Nickel under plated overall
- 2.2 Shell: Nickel under Plated surface layer

3.SPECIFICATION:
- 3.1 Current Rate: 1.8 Amperes for pin 1& pin4
  0.25 Amperes other contacts
- 3.2 insulator Resistance:100MΩ Min
- 3.3 Dielectric Strength: 100V AC
- 3.4 Contact Resistance: 30mΩ Max for pin 1& pin4
  50mΩ Max for other contacts
- 3.5 Operation Temperature: -55˚C ~ +85˚C
- 3.6 Insertion Force: 35 N
- 3.7 Extraction Force: 10 N

ITEM NO.	DESCRIPTION	DRAWN	DATE
4	更新樣式和尺寸	Jack	062426
3	更新圖面	Jack	061424
2	新增PCB LAYOUT尺寸	Jack	051424
1	更新圖面	Jack	041224

CONTACT 建倚科技股份有限公司
CONTACT TECHNOLOGY CORP.

TOLERANCE UNLESS OTHERWISE STATED :
Up to 5 ± 0.2
Above 5 ~ 15 ± 0.3
Above 15 ~ 30 ± 0.4
Above 30 ~ 50 ± 0.5
Angle ± 0.3°

3RD. ANGEL'S | UNITS MM

		DATE
DRAWN BY:	Jack Lu	06/24/26
CHECKED BY:	Jacky Chen	06/24/26
APPROVED BY:	Tony Kao	06/24/26

MAT'L		TITLE	CONNECTOR
FINISH		MODLE	USB 3.0 A/F 90 度 DIP 直腳
SCALE	1 : 1	DWG NO.	SUA-110H2-30x-S277
SHEET NO.	1 of 1	PART NO.	SUA-110H2-30x-S277

SIZE A4 | VER R4