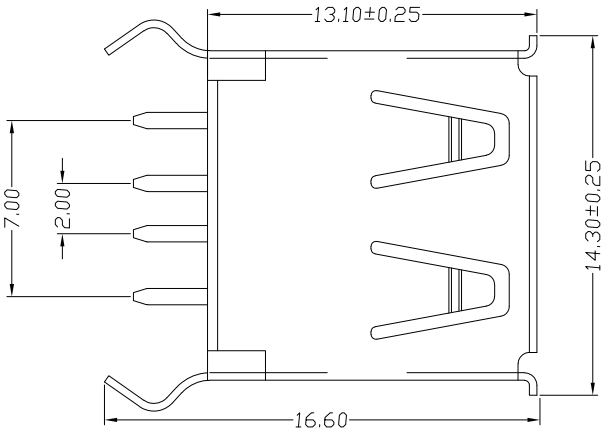

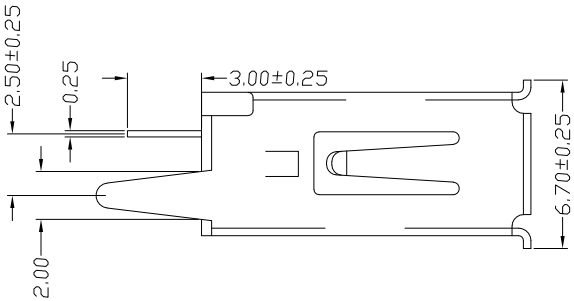

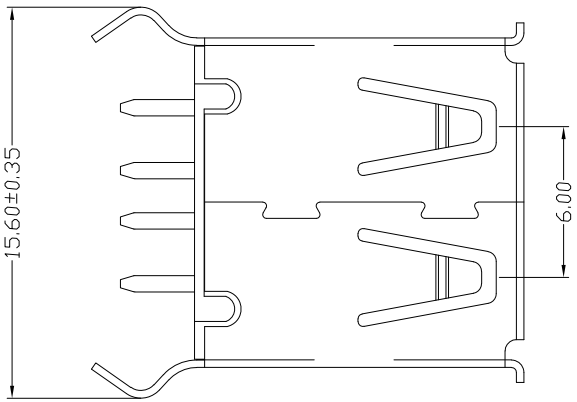

SUA-110V2x-x-S236

SHELL :

Blank : Brass
I : SPCC

Color :

Black : B
White : W

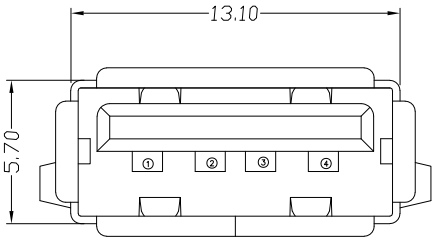

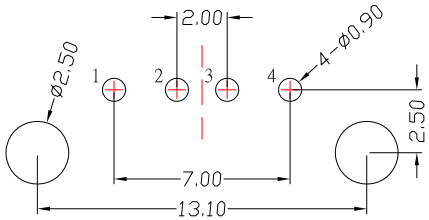

P.C.B LAYOUT

SPECIFICATIONS

Electrical:

1.Current Rating: 1.5A

2.Voltage Rating: 30 VDC

3.Contact Resistance: 30 mΩ Max

4.Dielectric Withstanding Voltage: 500 V AC For 1 min

5.Insulation Resistance: 1,000 MΩ Min

Mechanical:

1.Connector Mate and Unmate Force

1.1 Mate force: 3.57 kgf (Max)

1.2 Unmate force: 1.02 kgf (Min)

Material:

1.Housing: PBT

2.Contact: Brass

3.Shell: Brass / Spcc

Finish:

1.Contact: Plated Gold in Mating Area ;
Tin Plated on Solder Balls
Nickel under plated overall

2.Shell: Nickel under Plated surface layer

ITEM NO.	DESCRIPTION	DRAWN	DATE
1	更新圖面	Jack	061125

CONTACT 建倚科技股份有限公司
CONTACT TECHNOLOGY CORP.

TOLERANCE UNLESS OTHERWISE STATED :
Up to 5 ±0.2
Above 5 ~ 15 ±0.3
Above 15 ~ 30 ±0.4
Above 30 ~ 50 ±0.5
Angle ±0.3°

3RD. ANGEL'S | UNITS MM

DRAWN BY: Jack Lu	DATE 06/11/25	MAT'L	
CHECKED BY: Jacky Chen	DATE 06/11/25	FINISH	
APPROVED BY: Tony Kao	DATE 06/11/25	SCALE	1 : 1
		SHEET NO.	1 of 1

TITLE	CONNECTOR		
MODLE	USB AF 直立式 L13.1 捲邊 ,彎腳		
DWG NO.	SUA-110V2x-x-S236	SIZE	A4
PART NO.	SUA-110V2x-x-S236	VER	R1