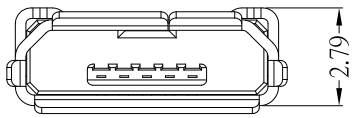

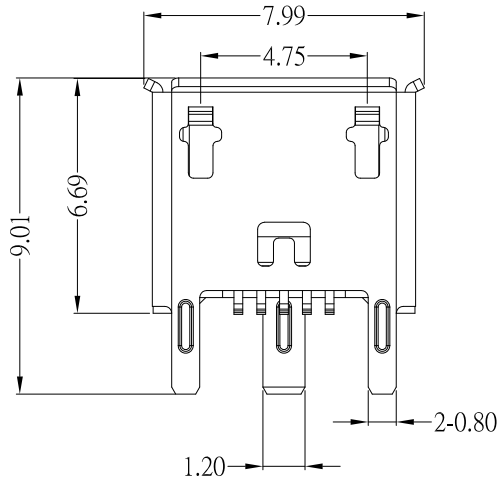

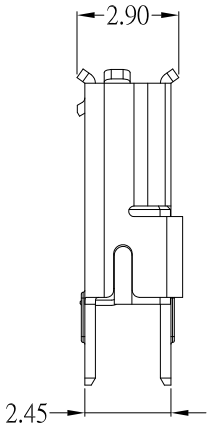

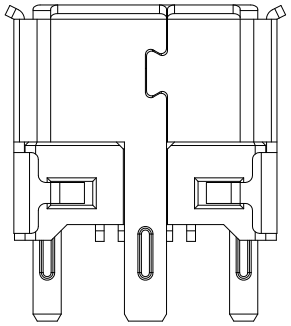

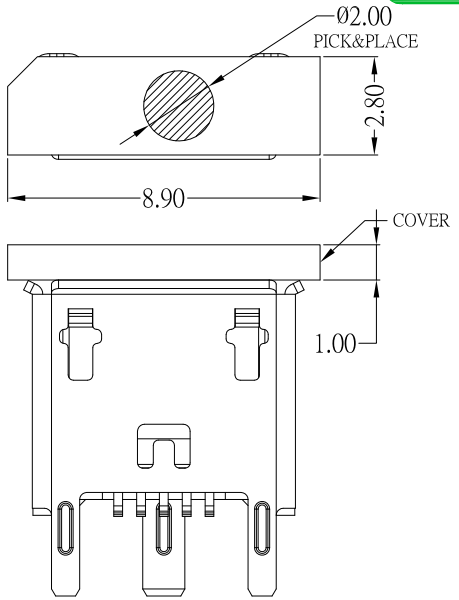

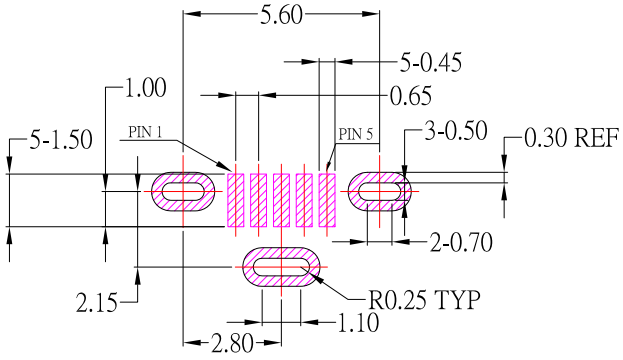

P.C.B LAYOUT MOUNTING PATTERN

NOTES:

1.MATERIAL:

1.1 HOUSING: LCP

1.2 CONTACT: BRASS

1.3 SHELL: SUS

2.Finish:

2.1 CONTACT: PLATED GOLD IN MATING AREA ;
GOLD PLATED ON SOLDER BALLS ;
NICKEL UNDER PLATED OVERALL

2.2 SHELL: TIN UNDER PLATED SURFACE LAYER

3.SPECIFICATION:

3.1 CURRENT RATING: 2.0 A MAX

3.2 DIELECTRIC WITHSSTANDING VOLTAGE: 100 V(ac) FOR 1min

3.3 CONTACT RESISTANCE: 50 mΩ MAX.

3.4 INSULATION RESISTANCE: 100 MΩ MIN.

3.5 TOTAL MATING FORCE: 3.57 Kgf MAX.

3.6 TOTAL UNMATING FORCE: 1.0 Kgf MIN.

3.7 TEMPERATURE RANGE: -30°C ~ +80°C

ITEM NO.	DESCRIPTION	DRAWN	DATE
2	更新RATING	Jack	082817
1	新增材質標示	Jack	021417

CONTACT 建倚科技股份有限公司
CONTACT TECHNOLOGY CORP.

TOLERANCE UNLESS OTHERWISE STATED : Up to 5 ±0.2; Above 5 ~ 15 ±0.3; Above 15 ~ 30 ±0.4; Above 30 ~ 50 ±0.5; Angle ±0.3°

3RD. ANGEL'S

UNITS MM

DRAWN BY: Jack Lu	DATE 08/28/17	MAT'L	
CHECKED BY: Jacky Chen	DATE 08/28/17	FINISH	
APPROVED BY: Tony Kao	DATE 08/28/17	SCALE 1 : 1	SHEET NO. 1 of 1

TITLE	CONNECTOR
MODLE	MICRO USB 5B/F 180 度 SMT
DWG NO.	MRUSB-5B-VS4-S316
PART NO.	MRUSB-5B-VS4-S316
SIZE	A4
VER	R2