MRUSB-5B-D5x-S347

SHELL鍍層:

TN
NI

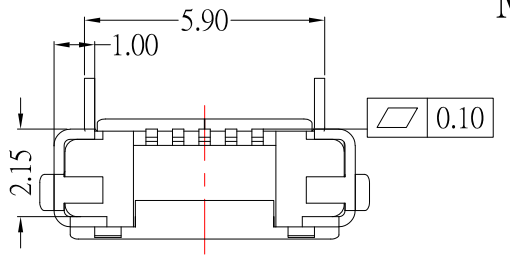

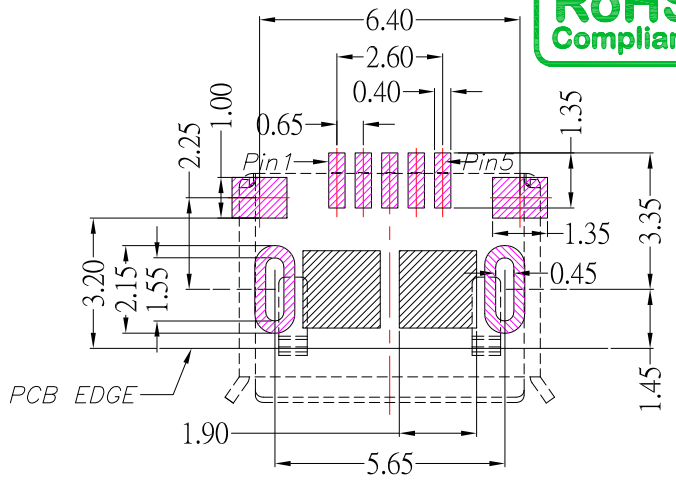

P.C.B LAYOUT

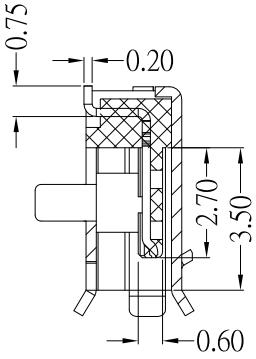

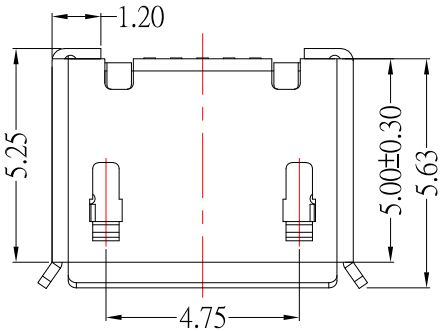

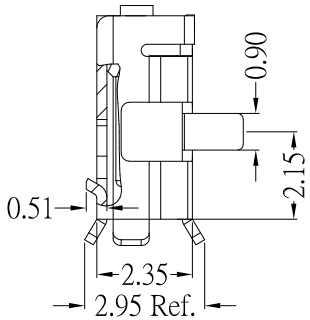

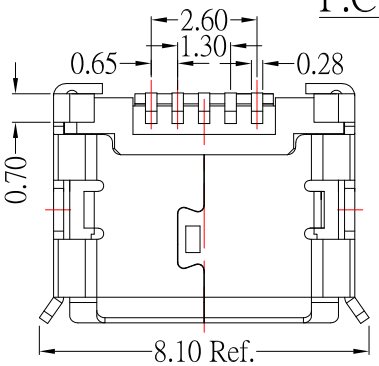

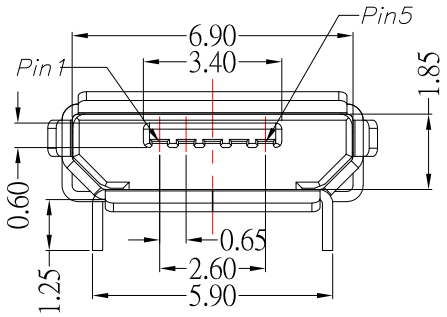

NOTES:

MATERIAL:

1.1 HOUSING: LCP,UL94V-0

1.2 CONTACT: PHOSPHOR BRONZE

1.3 SHELL: BRASS

Finish:

2.1 Contact: Plated Gold in Mating Area ;
Gold Plated on Solder Balls
Nickel under plated overall

2.2 Shell: Nickel or Tin under Plated surface layer

3.SPECIFICATION:

3.1 CURRENT RATING: 1.8 A(PIN1 & 5) ; 1.0 A(PIN2 & 3 &4)

3.2 DIELECTRIC WITHSSTANDING VOLTAGE: 100 V(ac) FOR 1min

3.3 CONTACT RESISTANCE: 30 mΩ MAX.

3.4 INSULATION RESISTANCE: 100 MΩ MIN.

3.5 TOTAL MATING FORCE: 3.57 Kgf MAX.

3.6 TOTAL UNMATING FORCE: 1.0 Kgf MIN.

3.7 TEMPERATURE RANGE: -30°C ~ +80°C

ITEM NO.	DESCRIPTION	DRAWN	DATE
3	更新材質和SPEC	Jack	111925
2	新增尺寸	Jack	070820
1	更新底部樣式	Jack	022719

CONTACT 建倚科技股份有限公司
CONTACT TECHNOLOGY CORP.

TOLERANCE UNLESS OTHERWISE STATED :
Up to 5 ±0.2
Above 5 ~ 15 ±0.3
Above 15 ~ 30 ±0.4
Above 30 ~ 50 ±0.5
Angle ±0.3°

3RD. ANGEL'S | UNITS MM

DRAWN BY: Jack Lu	DATE 11/19/25	
CHECKED BY: Jacky Chen	DATE 11/19/25	
APPROVED BY: Tony Kao	DATE 11/19/25	

MAT'L		TITLE	CONNECTOR
FINISH		MODLE	MICRO USB 5BF 前插 (5.65)後貼無柱
SCALE	1 : 1	DWG NO.	MRUSB-5B-D5x-S347
SHEET NO.	1 of 1	PART NO.	MRUSB-5B-D5x-S347

SIZE A4 | VER R3