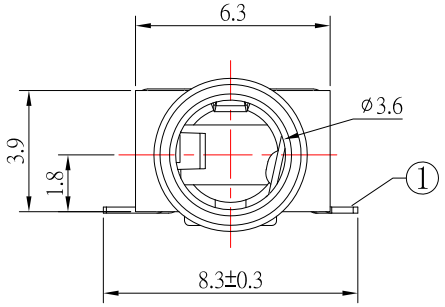

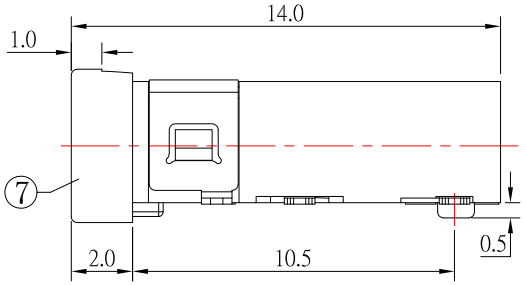

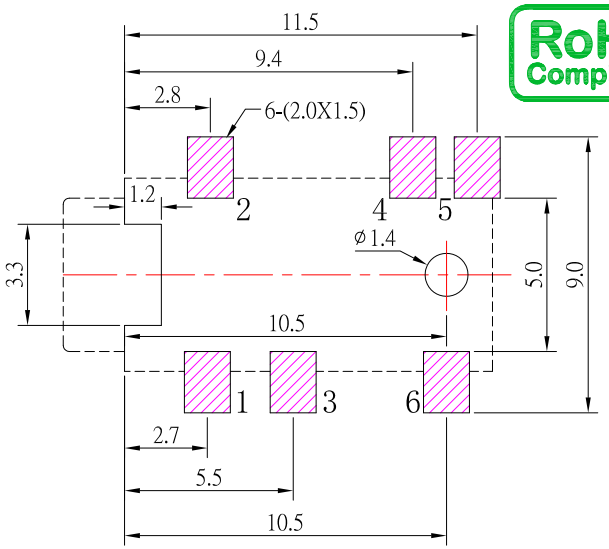

P.C.B LAYOUT
TOP VIEW

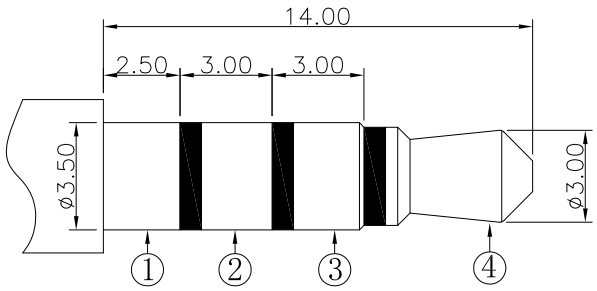

ø3.50mm 4 POLE PLUG

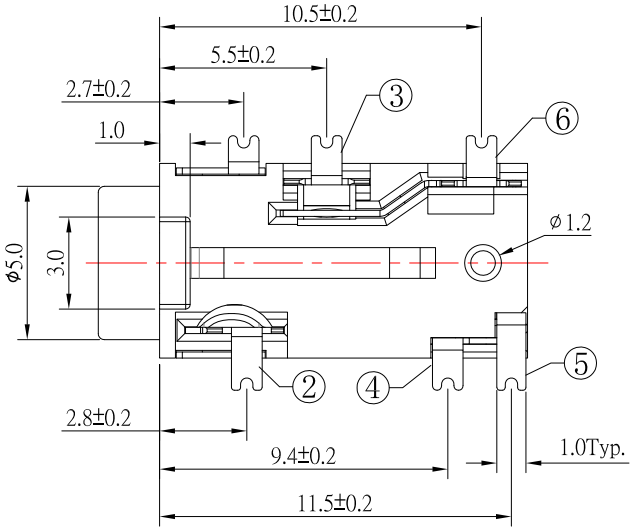

SCHEMATIC

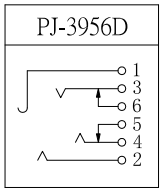

SPECIFICATION

1.Rating ：DC 30V 0.5A；
2.Contact resistance：≤30mΩ；
3.Insulation resistance：≥100MΩ；
4.Withstand voltage：500VAC；
5.Insertion and extraction force：3-20N;
6.life test：5,000 cycles。

NO.	DESCRIPTION	QTY	MATERIAL	PLATING
7	HOUSING	1	PA9T	
6	6# CONTACT FOOT	1	PHOSPHOR BRONZE	Au-Plating
5	5# CONTACT FOOT	1	PHOSPHOR BRONZE	Au-Plating
4	4# CONTACT FOOT	1	PHOSPHOR BRONZE	Au-Plating
3	3# CONTACT FOOT	1	PHOSPHOR BRONZE	Au-Plating
2	2# CONTACT FOOT	1	PHOSPHOR BRONZE	Au-Plating
1	1# CONTACT FOOT	1	PHOSPHOR BRONZE	Au-Plating

ITEM NO.	DESCRIPTION	DRAWN	DATE
1	更新樣式	Jack	121719

CONTACT 建倚科技股份有限公司
CONTACT TECHNOLOGY CORP.

TOLERANCE UNLESS OTHERWISE STATED：
Up to 5 ±0.2
Above 5 ~ 15 ±0.3
Above 15 ~ 30 ±0.4
Above 30 ~ 50 ±0.5
Angle ±0.3°

3RD. ANGEL'S | UNITS MM

DRAWN BY: Jack Lu	DATE 12/17/19	MAT'L	
CHECKED BY: Jacky Chen	DATE 12/17/19	FINISH	
APPROVED BY: Tony Kao	DATE 12/17/19	SCALE 1 : 1	SHEET NO. 1 of 1

TITLE	JACK		
MODLE	PHONE JACK		
DWG NO.	PJ-3956D-S124	SIZE	A4
PART NO.	PJ-3956D-S124	VER	R1