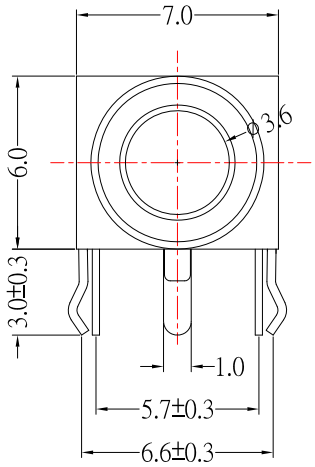

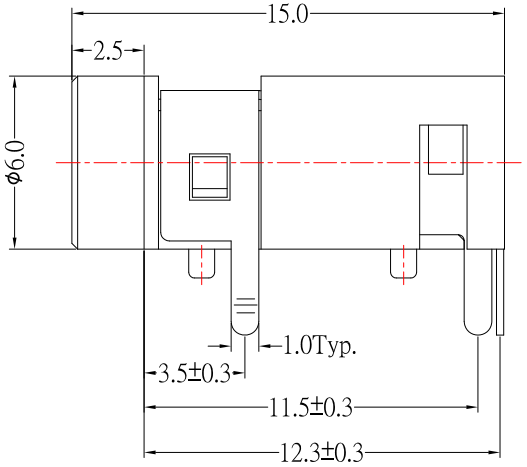

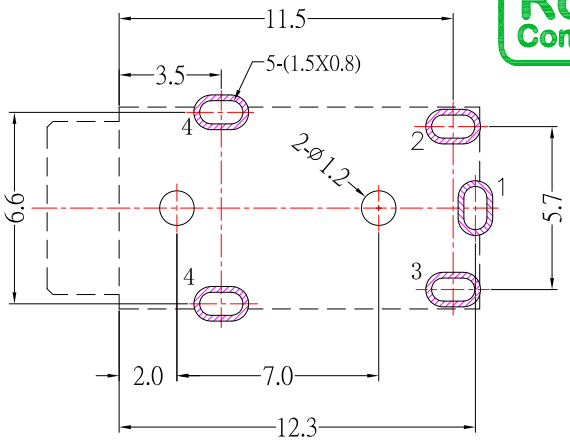

P.C.B LAYOUT MOUNTING PATTERN
(TOP VIEW)

MODEL NO.	PJ-D3022-S124
SCHEMATIC	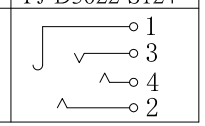

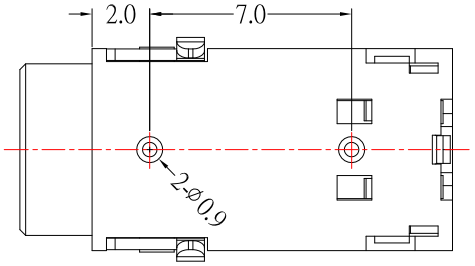

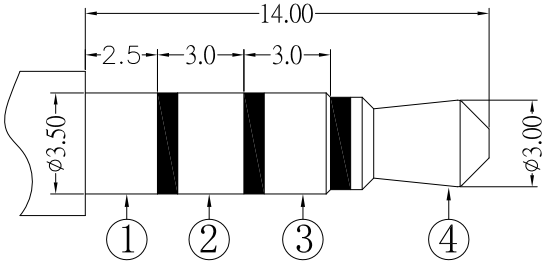

ø3.50mm 4 POLE PLUG

SPECIFICATION

1.Rating ：DC 30V , 1.0A；
2.Contact resistance：≤ 30mΩ ；
3.Insulation resistance：≥100MΩ ；
4.Withstand voltage：500VAC ；
5.Insertion and extraction force：3-20N
6.life test：10,000 cycles。

NO.	DESCRIPTION	QTY	MATERIAL	PLATING
5	HOUSING	1	PBT	
4	CONTACT FOOT #4	1	Phosphor Bronze	Sn-Plating
3	CONTACT FOOT #3	1	Brass	Sn-Plating
2	CONTACT FOOT #2	1	Phosphor Bronze	Sn-Plating
1	CONTACT FOOT #1	1	Phosphor Bronze	Sn-Plating

ITEM NO.	DESCRIPTION	DRAWN	DATE
2	更新尺寸公差	Jack	101521
1	更新為A0版	Jack	102616

CONTACT 建倚科技股份有限公司
CONTACT TECHNOLOGY CORP.

TOLERANCE UNLESS OTHERWISE STATED：
Up to 5 ±0.2
Above 5 ~ 15 ±0.3
Above 15 ~ 30 ±0.4
Above 30 ~ 50 ±0.5
Angle ±0.3°

3RD. ANGEL'S | UNITS MM

DRAWN BY: Jack Lu	DATE 10/15/21	MAT'L		TITLE	JACK
CHECKED BY: Jacky Chen	DATE 10/15/21	FINISH		MODLE	PHONE JACK
APPROVED BY: Tony Kao	DATE 10/15/21	SCALE	1 : 1	DWG NO.	PJ-D3022-S124
		SHEET NO.	1 of 1	PART NO.	PJ-D3022-S124

SIZE A4 | VER R2