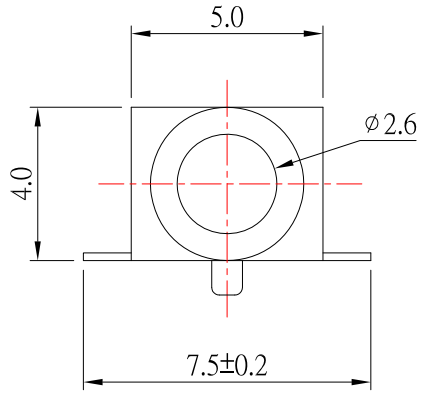

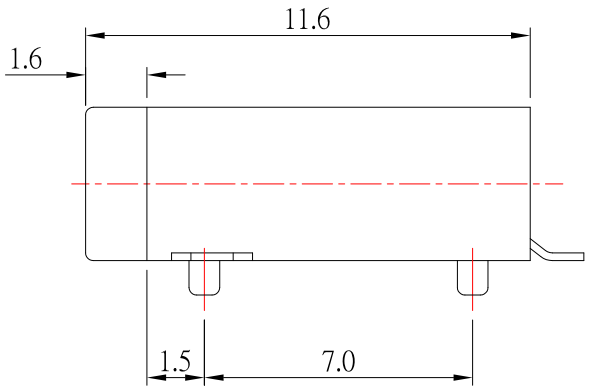

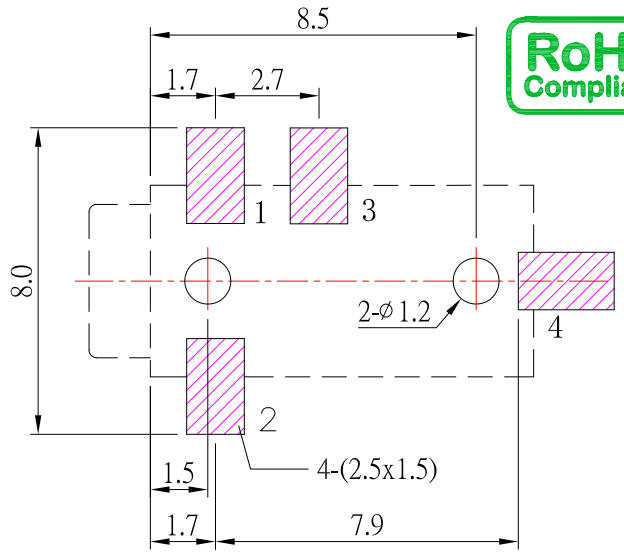

P.C.B LAYOUT
TOP VIEW

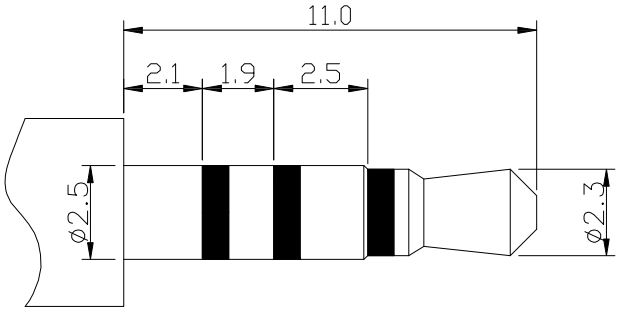

⌀2.50mm 4 POLE PLUG

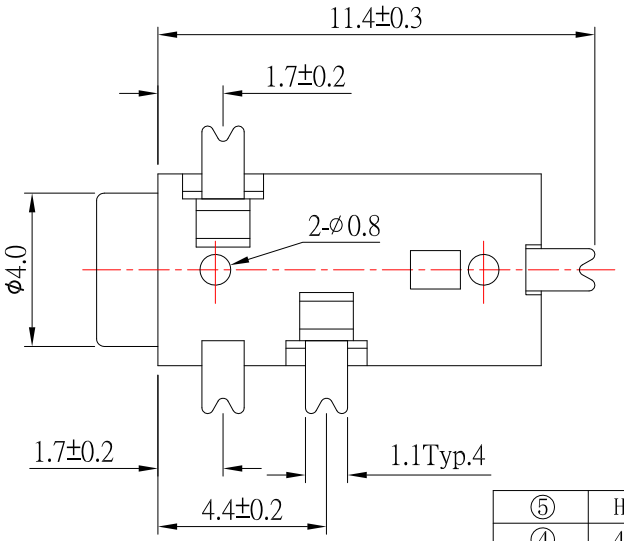

SCHEMATIC

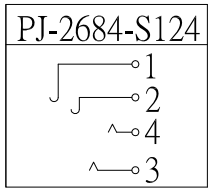

SPECIFICATION

1.Rating ：DC 30V, 1.0A；
2.Contact resistance：≤30mΩ；
3.Insulation resistance：≥100MΩ；
4.Withstand voltage：500VAC ；
5.Insertion and extraction force：3-20N;
6.life test：5,000 cycles。

NO.	DESCRIPTION	QTY	MATERIAL	PLATING
⑤	HOUSING	1	PA9T	
④	4# CONTACT FOOT	1	PHOSPHOR BRONZE	Ag-Plating
③	3# CONTACT FOOT	1	PHOSPHOR BRONZE	Ag-Plating
②	2# CONTACT FOOT	1	PHOSPHOR BRONZE	Ag-Plating
①	1# CONTACT FOOT	1	PHOSPHOR BRONZE	Ag-Plating

ITEM NO.	DESCRIPTION	DRAWN	DATE
1	更新plug	Jack	111419

CONTACT 建倚科技股份有限公司
CONTACT TECHNOLOGY CORP.

TOLERANCE UNLESS OTHERWISE STATED：
Up to 5 ±0.2
Above 5 ~ 15 ±0.3
Above 15 ~ 30 ±0.4
Above 30 ~ 50 ±0.5
Angle ±0.3°

3RD. ANGEL'S | UNITS MM

DRAWN BY: Jack Lu	DATE 11/14/19	MAT'L		TITLE	JACK
CHECKED BY: Jacky Chen	DATE 11/14/19	FINISH		MODLE	PHONE JACK
APPROVED BY: Tony Kao	DATE 11/14/19	SCALE	1 : 1	DWG NO.	PJ-2684-S124
		SHEET NO.	1 of 1	PART NO.	PJ-2684-S124

SIZE A4 | VER R1