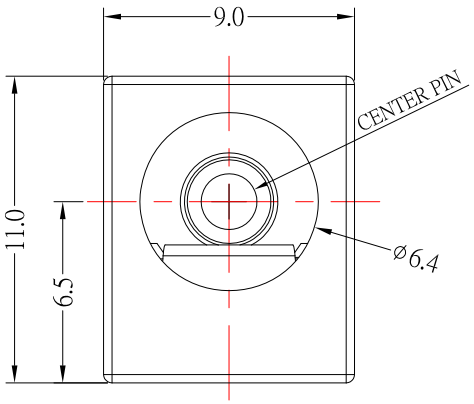

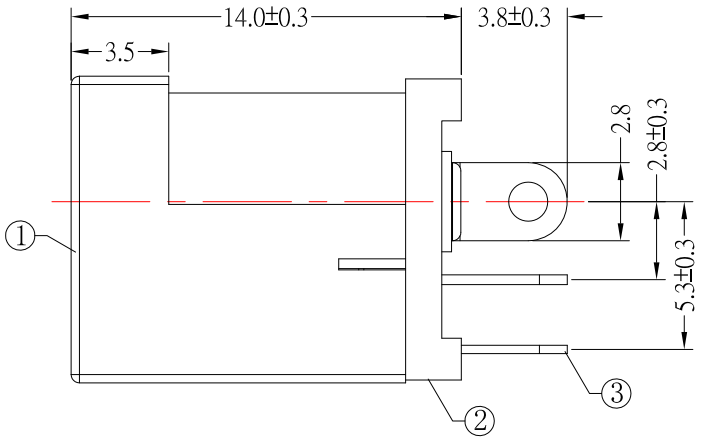

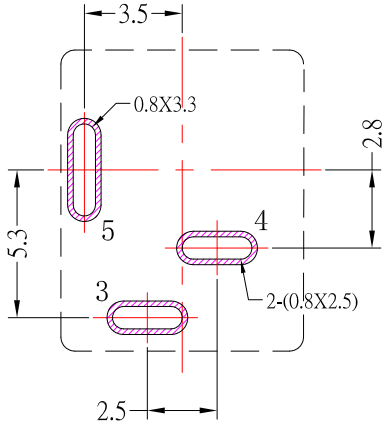

P.C.B LAYOUT MOUNTING PATTERN
(TOP VIEW)

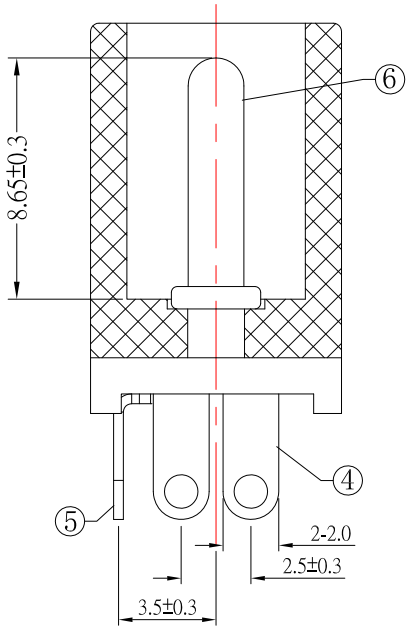

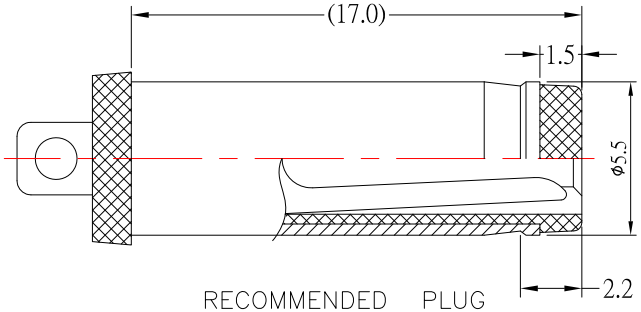

RECOMMENDED PLUG

MODEL NO.	DC-D012D-x-S124
SCHEMATIC	5/6 (+) 4 3 (−)
CENTER PIN	⌀2.0mm
	⌀2.5mm

SPECIFICATION

1.Rating ：DC 30V, 1.0A / 16V 3.0A ;
2.Contact resistance：≤30mΩ ;
3.Insulation resistance：≥100MΩ ;
4.Withstand voltage：500VAC ;
5.Insertion and extraction force：3-30N;
6.life test：5,000 cycles。

NO.	DESCRIPTION	QTY	MATERIAL	REMARK
⑥	PIN	1	BRASS	Ni-Plated
⑤	CURVE PIECE	1	BRASS	Sn-Plated
④	FLAT PIECE	1	BRASS	Sn-Plated
③	SPRING	1	PHOSPHOR BRONZE	Sn-Plated
②	COVER	1	PBT	
①	HOUSING	1	PBT	

ITEM NO.	DESCRIPTION	DRAWN	DATE
4	更新圖面	Jack	113022
3	更新材質	Jack	081017
2	更新Rating	Jack	061217
1	更新材質	Jack	032917

CONTACT 建倚科技股份有限公司
CONTACT TECHNOLOGY CORP.

TOLERANCE UNLESS OTHERWISE STATED : Up to 5 ±0.2; Above 5 ~ 15 ±0.3; Above 15 ~ 30 ±0.4; Above 30 ~ 50 ±0.5; Angle ±0.3°
3RD. ANGEL'S
UNITS MM

DRAWN BY: Jack Lu	DATE 11/30/22	MAT'L	
CHECKED BY: Jacky Chen	DATE 11/30/22	FINISH	
APPROVED BY: Tony Kao	DATE 11/30/22	SCALE 1 : 1	SHEET NO. 1 of 1

TITLE	JACK		
MODLE	DC JACK		
DWG NO.	DC-D012D-x-S124	SIZE	A4
PART NO.	DC-D012D-x-S124	VER	R4