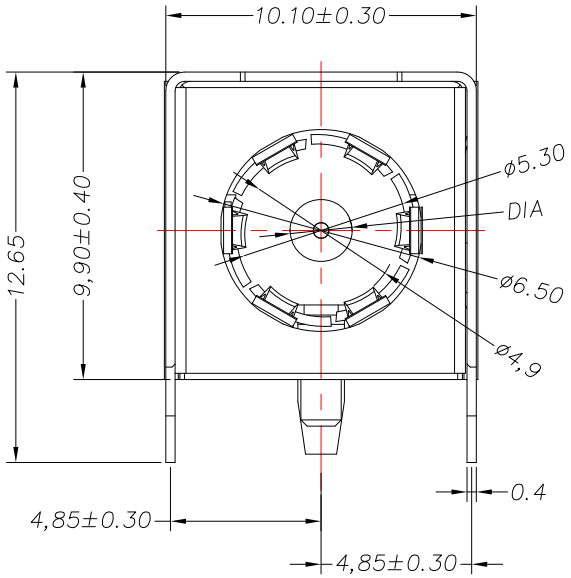

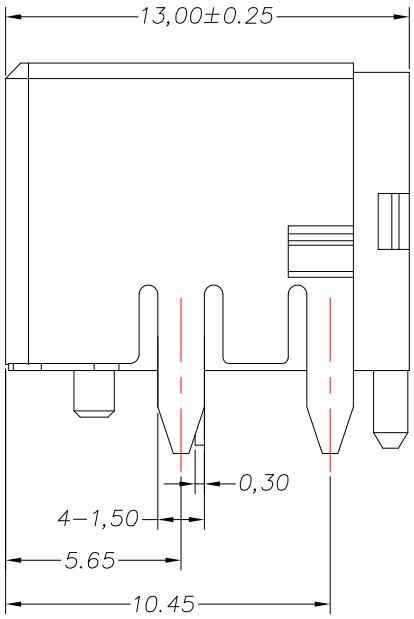

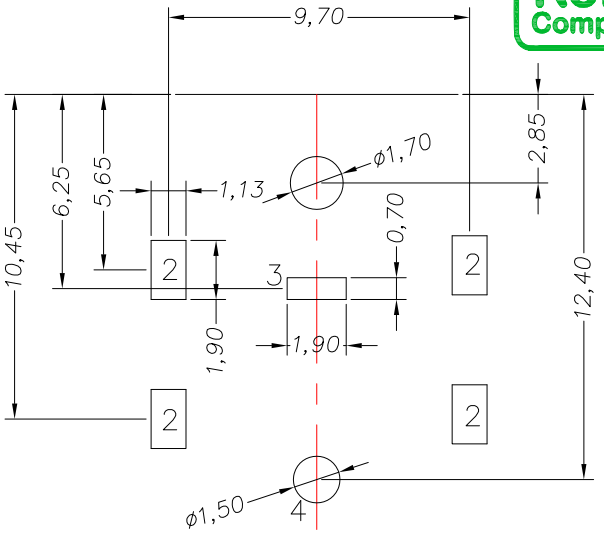

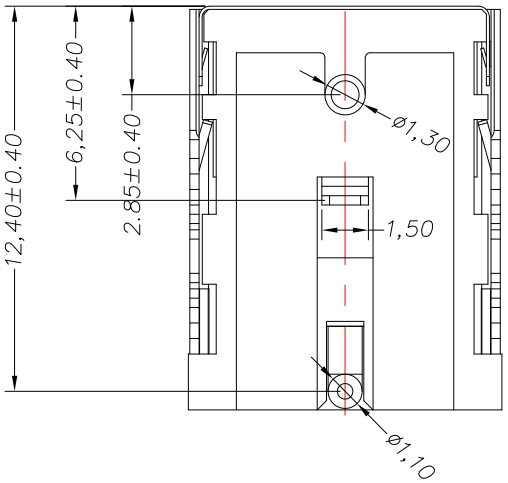

P.C.B LAYOUT
TOP VIEW

Model NO.	DC-081HS-2.0	DC-081HS-2.5
PIN(X)	ϕ2.0	ϕ2.5

MODEL NO.	DC-081HS-x
SCHEMATIC	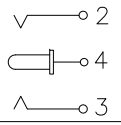

SPECIFICATION

1.Rating ：DC 20V, 10.0A
2.Contact resistance：≤ 30mΩ
3.Insulation resistance：≥100MΩ
4.Withstand voltage：500VAC
5.Insertion and extraction force：3-30N
6.life test：5,000 cycles

NO.	DESCRIPTION	QTY	MATERIAL	PLATING
6	COVER	1	SUS	
5	SPACER	1	SUS	
4	BERRY PIN	1	COPPER ALLOY	Ni-Plating
3	CCAW	1	PHOSPHOR BRONZE	Tin Plated over Ni
2	FOOT COVERLET	1	SPCC	Ni-Plating
1	HOUSING	1	PA9T (BLACK)	

ITEM NO.	DESCRIPTION	DRAWN	DATE	ITEM NO.	DESCRIPTION	DRAWN	DATE
11	新增尺寸	Jack	063020	16	更新材質	Jack	082621
10	更新樣式	Jack	111819	15	更新尺寸公差	Jack	082521
9	更新尺寸及樣式	Lan	071619	14	更新鍍層	Jack	053121
8	更新圖面	Jack	052319	13	更新材質及鍍層	Jack	052821
7	更新圖面	Jack	052219	12	更新尺寸公差	Jack	082720
6	更新圖面	Jack	043018				
5	更新材質	Jack	010518				
4	更新圖面	Jack	122517				
3	更新材質	Jack	051117				
2	更新Rating	Jack	062016				
1	新增SPEC及PIN選項	Jack	121515				

CONTACT 建倚科技股份有限公司
CONTACT TECHNOLOGY CORP.

TOLERANCE UNLESS OTHERWISE STATED：
Up to 5 ±0.2
Above 5 ~ 15 ±0.3
Above 15 ~ 30 ±0.4
Above 30 ~ 50 ±0.5
Angle ±0.3°

3RD. ANGEL'S | UNITS MM

DRAWN BY: Jack Lu	DATE 08/26/21	MAT'L		TITLE	JACK		
CHECKED BY: Jacky Chen	DATE 08/26/21	FINISH		MODLE	DC JACK		
APPROVED BY: Tony Kao	DATE 08/26/21	SCALE	1 : 1	DWG NO.	DC-081HS-x-S214	SIZE	A4
		SHEET NO.	1 of 1	PART NO.	DC-081HS-x-S214	VER	R16