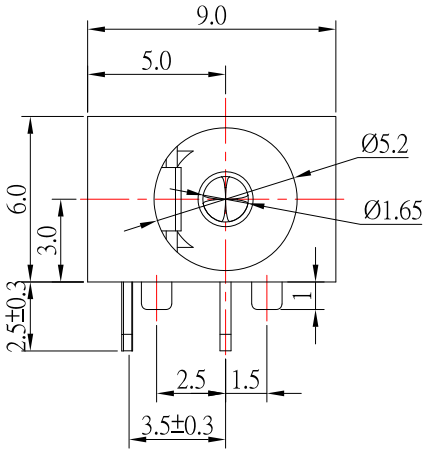

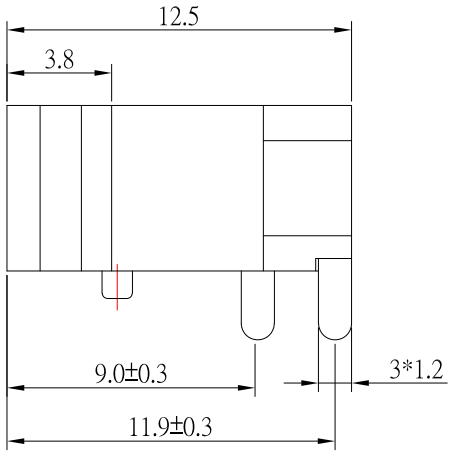

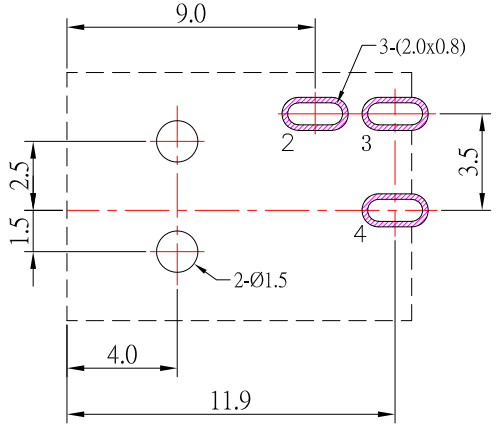

P.C.B LAYOUT
(TOP VIEW)

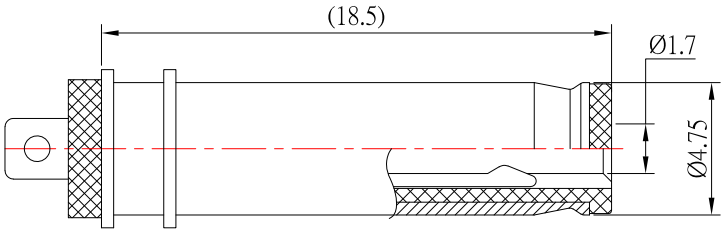

RECOMMENDED PLUG

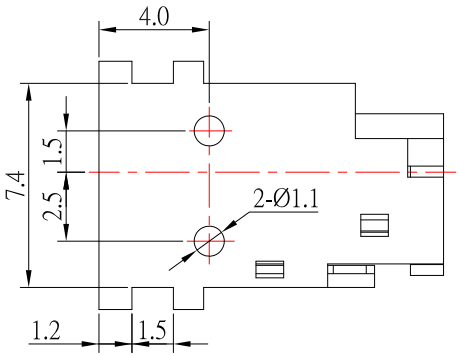

SPECIFICATION

1.Rating ：DC 30V, 3.0A；
2.Contact resistance：≤ 30mΩ ；
3.Insulation resistance：⩾100MΩ ；
4.Withstand voltage：500VAC ；
5.Insertion and extraction force：3-30N
6.life test：5,000 cycles。

MODEL NO.	DC-026-1.65-S124
SCHEMATIC	4 (+) 3 2 (–)
CENTER PIN	⌀1.65 mm

NO.	DESCRIPTION	QTY	MATERIAL	PLATING
4	PIN	1	Phosphor Bronze	Ag-Plating
3	SPRING	1	Phosphor Bronze	Ag-Plating
2	CURVE PIECE	1	Brass	Ag-Plating
1	HOUSING	1	PA9T	

ITEM NO.	DESCRIPTION	DRAWN	DATE
1	更新圖面	Jack	070725

CONTACT 建倚科技股份有限公司
CONTACT TECHNOLOGY CORP.

TOLERANCE UNLESS OTHERWISE STATED : Up to 5 ±0.2; Above 5 ~ 15 ±0.3; Above 15 ~ 30 ±0.4; Above 30 ~ 50 ±0.5; Angle ±0.3°

3RD. ANGEL'S | UNITS MM

DRAWN BY: Jack Lu	DATE 07/07/25	MAT'L	
CHECKED BY: Jacky Chen	DATE 07/07/25	FINISH	
APPROVED BY: Tony Kao	DATE 07/07/25	SCALE	1 : 1
		SHEET NO.	1 of 1

TITLE	JACK		
MODLE	DC JACK		
DWG NO.	DC-026-1.65-S124	SIZE	A4
PART NO.	DC-026-1.65-S124	VER	R1