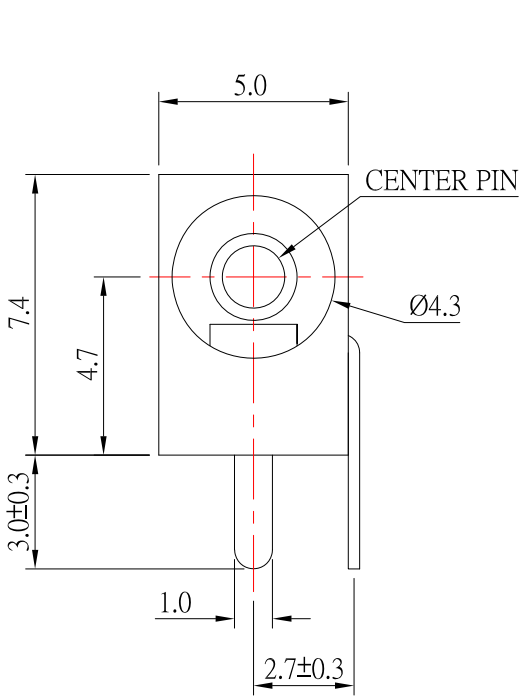

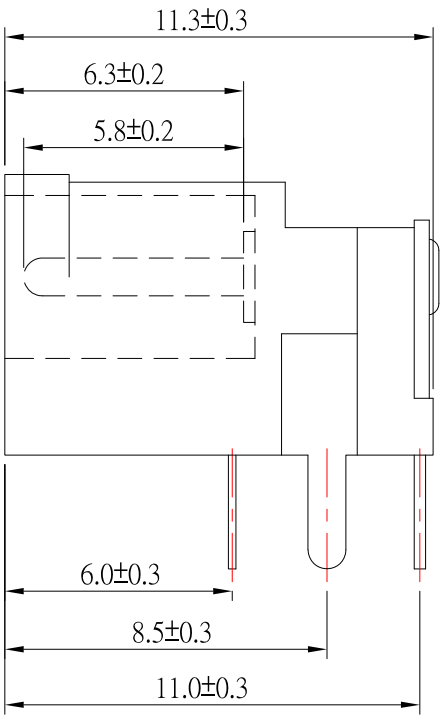

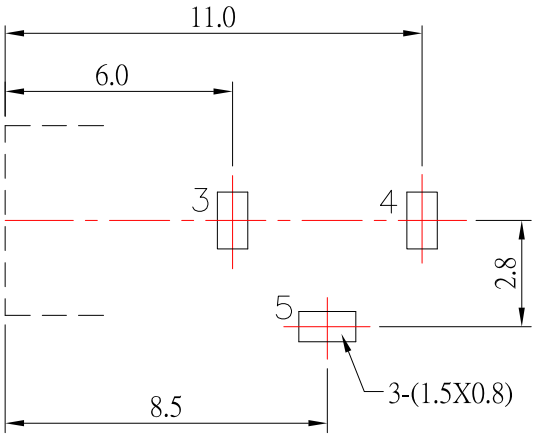

P.C.B LAYOUT
TOP VIEW

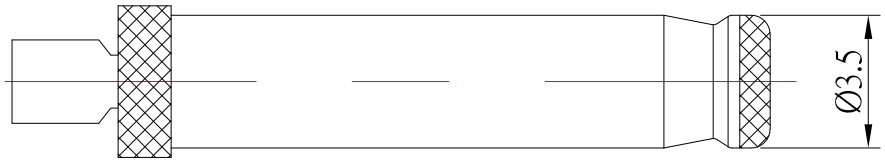

RECOMMENDED PLUG

MODEL NO.	DC-009-1-x-S124
SCHEMATIC	4/6 (+) 5 3 (−)
CENTER PIN	ϕ1.0 mm ϕ1.3 mm

SPECIFICATION

1.Rating ：DC 30V, 3.0A；
2.Contact resistance：≤30mΩ ；
3.Insulation resistance：≥100MΩ ；
4.Withstand voltage：500VAC ；
5.Insertion and extraction force：3-30N;
6.life test：5,000 cycles。

NO.	DESCRIPTION	QTY	MATERIAL	FINISH
6	PIN	1	H59	Sn-PLATED
5	CURVE PIECE	1	BRASS	Sn-PLATED
4	FLAT PIECE	1	BRASS	Sn-PLATED
3	SPRING	1	SUS	Sn-PLATED
2	COVER	1	PBT	
1	HOUSING	1	PBT	

ITEM NO.	DESCRIPTION	DRAWN	DATE
6	更新圖面	Jack	070826
5	更新圖面	Jack	120125
4	更新材質	Jack	101725
3	更新樣式	Lan	062019
2	更新圖面	Jack	112917
1	更新為A0版	Jack	100516

CONTACT 建倚科技股份有限公司
CONTACT TECHNOLOGY CORP.

TOLERANCE UNLESS OTHERWISE STATED : Up to 5 ±0.2; Above 5 ~ 15 ±0.3; Above 15 ~ 30 ±0.4; Above 30 ~ 50 ±0.5; Angle ±0.3°

3RD. ANGEL'S | UNITS MM

DRAWN BY: Jack Lu	DATE 07/08/26	MAT'L	
CHECKED BY: Jacky Chen	DATE 07/08/26	FINISH	
APPROVED BY: Tony Kao	DATE 07/08/26	SCALE 1 : 1	SHEET NO. 1 of 1

TITLE	JACK		
MODLE	DC JACK		
DWG NO.	DC-009-1-x-S124	SIZE	A4
PART NO.	DC-009-1-x-S124	VER	R6