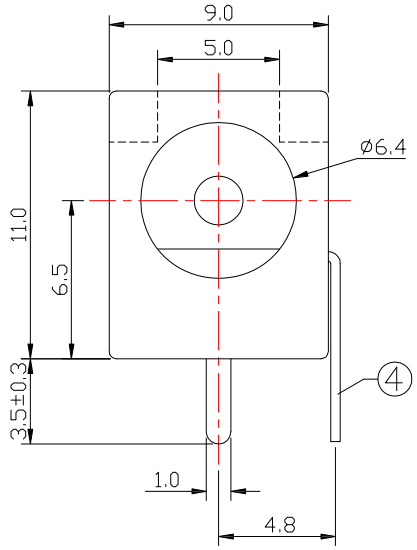

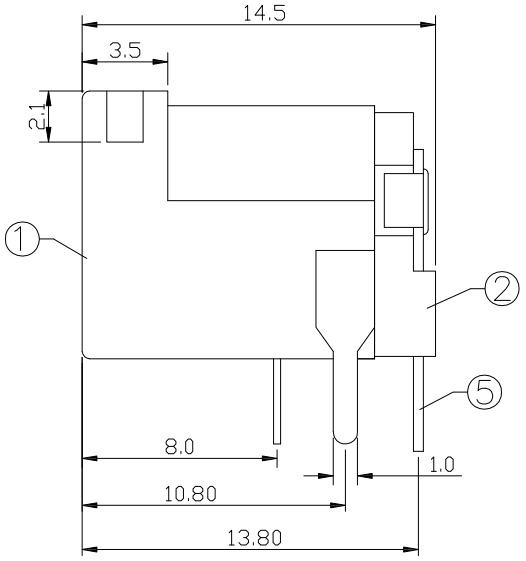

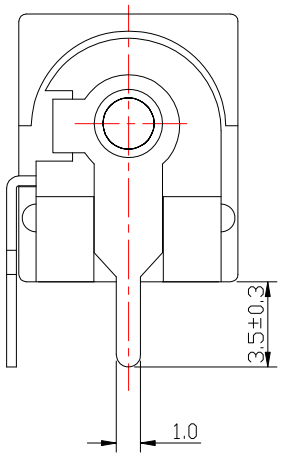

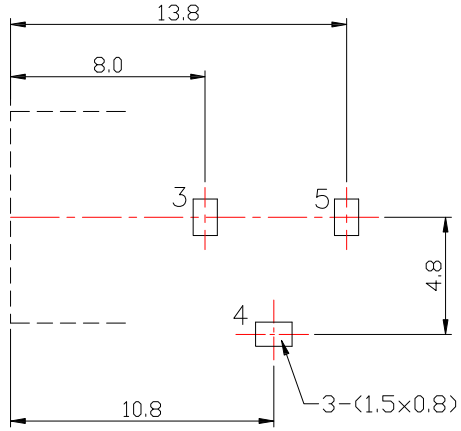

P.C.B LAYOUT
TOP VIEW

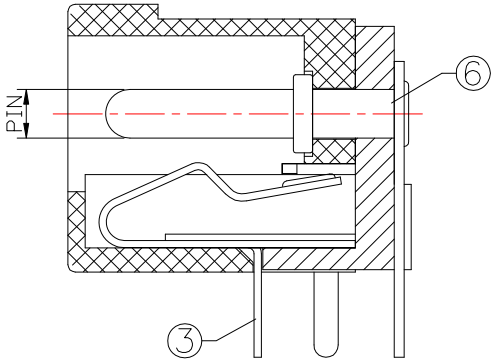

SPECIFICATION

1.Rating ：DC 30V 2.0A；

2.Contact resistance：≤30mΩ；

3.Insulation resistance：≥100MΩ；

4.Withstand voltage：500VAC ；

5.Insertion and extraction force：3-30N;

6.life test：5,000 cycles。

MODEL NO.	DC-002-3-x
SCHEMATIC	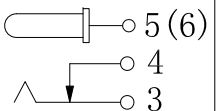
CENTER PIN	ø2.0 mm
	ø2.5 mm

NO.	DESCRIPTION	QTY	MATERIAL	PLATING
6	PIN	1	BRASS	Ni-Plating
5	FLAT FOOT	1	BRASS	Sn-Plating
4	CURVE PIECE	1	BRASS	Sn-Plating
3	SPRING PIECE	1	PHOSPHOR BRONZE	Sn-Plating
2	COVER	1	PBT	
1	HOUSING	1	PBT	

ITEM NO.	DESCRIPTION	DRAWN	DATE
1	更新樣式	lan	042319

CONTACT 建倚科技股份有限公司
CONTACT TECHNOLOGY CORP.

TOLERANCE UNLESS OTHERWISE STATED : Up to 5 ±0.2; Above 5 ~ 15 ±0.3; Above 15 ~ 30 ±0.4; Above 30 ~ 50 ±0.5; Angle ±0.3°

3RD. ANGEL'S | UNITS MM

DRAWN BY: Jack Lu	DATE 04/23/19	MAT'L		TITLE	JACK
CHECKED BY: Jacky Chen	DATE 04/23/19	FINISH		MODLE	DC JACK
APPROVED BY: Tony Kao	DATE 04/23/19	SCALE	1 : 1	DWG NO.	DC-002-3-x-S124
		SHEET NO.	1 of 1	PART NO.	DC-002-3-x-S124

SIZE A4 | VER R1