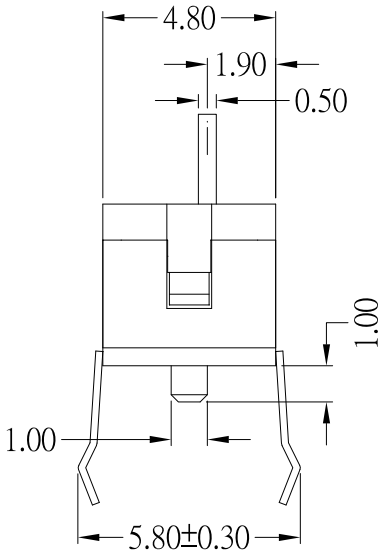

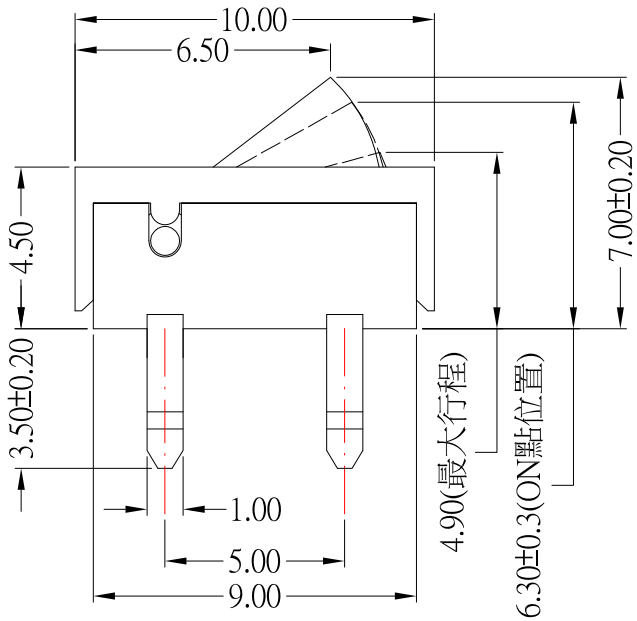

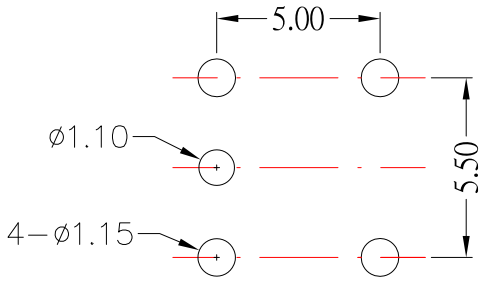

MOUNTING HOLES

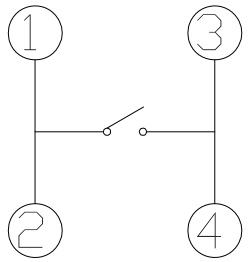

SCHEMATIC

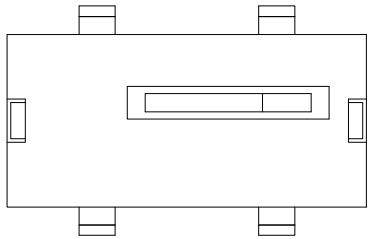

SPECIFICATION

1. RATING : DC12V, 0.1A ;
2. CONTACT RESISTANCE : ≤ 100mΩ ;
3. INSULATION RESISTANCE : ≥ 100MΩ ;
4. .OPERATING TEMPERATURE : -25˚C ~ +80˚C ;
5. HUMIDITY APPLICATION : < 85% RH ;
6. OPERATING FORCE： 40±15gf ;
7. LIFE : 50,000 CYCLES ;

ITEM	PART NAME	QTY	MATERIAL	FINISHING
⑤	Terminal	4	BRASS	Ag Plating
④	Base	1	PPA	Black
③	Contact	1	PHOSPHOR BRONZE	Ag Plating
②	Cover	1	PPA	Black
①	Button	1	LCP	

ITEM NO.	DESCRIPTION	DRAWN	DATE
2	更新尺寸和材質	Jack	092126
1	更新圖面	Jack	060921

CONTACT 建倚科技股份有限公司
CONTACT TECHNOLOGY CORP.

TOLERANCE UNLESS OTHERWISE STATED : Up to 5 ±0.2; Above 5 ~ 15 ±0.3; Above 15 ~ 30 ±0.4; Above 30 ~ 50 ±0.5; Angle ±0.3˚

3RD. ANGEL'S | UNITS | MM

DRAWN BY: Jack Lu	DATE 09/21/26	MAT'L	
CHECKED BY: Jacky Chen	DATE 09/21/26	FINISH	
APPROVED BY: Tony Kao	DATE 09/21/26	SCALE	1 : 1
		SHEET NO.	1 of 1

TITLE	SWITCH		
MODLE	DETECTOR SWITCH		
DWG NO.	RM021-01C-S379	SIZE	A4
PART NO.	RM021-01C-S379	VER	R2