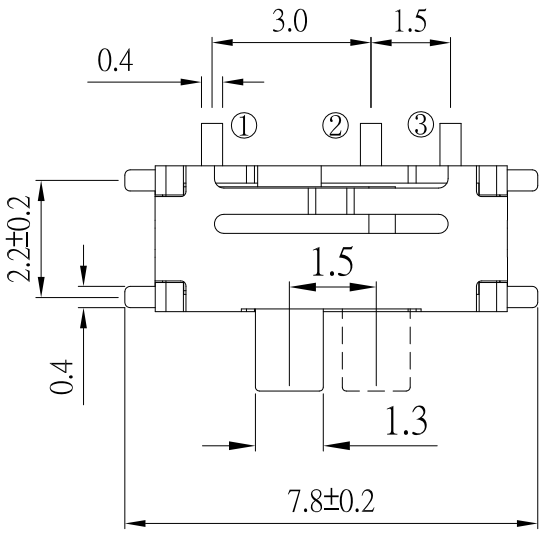

SS-B91APxx-x-S246

Model No.	X (mm)
SS-B91AP	1.5
SS-B91APK	2.0
SS-B91APL	2.5

SLIDER COLOR :

Black : B
White : W

COVER PLATING :

Model No.	Plating
BLANK	Nickel
1	Ag

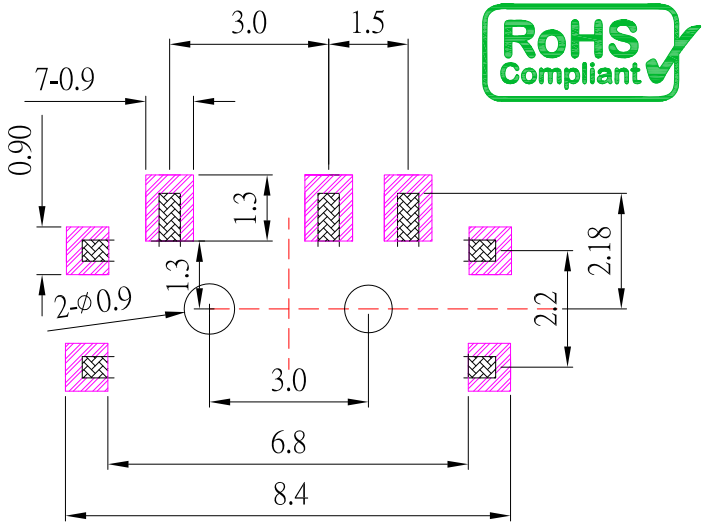

P.C.B LAND PATTERN

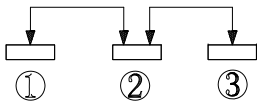

CIRCUIT DIAGRAM

SPECIFICATIONS

Rating	100mA , 12V DC
Insulation Resistance	100MΩ Min.
Dielectric Withstanding Voltage	AC 250 V(50Hz)1min
Contact Resistance	100mΩ Max.
Operating Force	150 ± 30gf
Operating Life	10,000 cycles

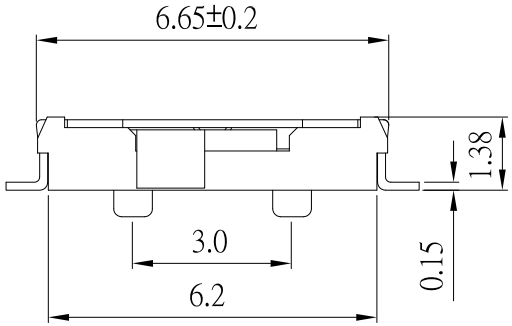

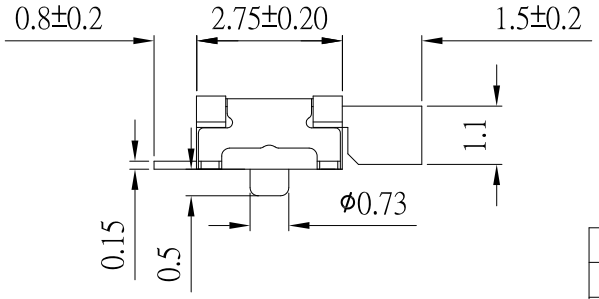

NO.	DESCRIPTION	QTY	MATERIAL	PLATING
E	COVER	1	SUS	
D	SLIDER	1	PA46(Black)/PPA(White)	
C	CLIP	1	PHOSPHOR BRONZE	Ag plated
B	TERMINAL	1	PHOSPHOR BRONZE	Ag plated
A	BASE	1	LCP(Black)	

ITEM NO.	DESCRIPTION	DRAWN	DATE
8	新增COVER PLATING選項	Jack	022124
7	新增PCB LAYOUT尺寸	Jack	050322
6	更新Operating Force	Jack	101221
5	更新Operating Force	Jack	011521
4	新增撥柄行程	Jack	011221
3	更新材質	Jack	112620
2	更新圖面	Jack	112520
1	新增柄長選項	Jack	090420

CONTACT 建倚科技股份有限公司
CONTACT TECHNOLOGY CORP.

TOLERANCE UNLESS OTHERWISE STATED : Up to 5 ±0.2; Above 5 ~ 15 ±0.3; Above 15 ~ 30 ±0.4; Above 30 ~ 50 ±0.5; Angle ±0.3°

3RD. ANGEL'S | UNITS | MM

DRAWN BY: Jack Lu	DATE 02/21/24	MAT'L		TITLE	SWITCH
CHECKED BY: Jacky Chen	DATE 02/21/24	FINISH		MODLE	SLIDE SWICTH
APPROVED BY: Tony Kao	DATE 02/21/24	SCALE	1 : 1	DWG NO.	SS-B91APxx-x-S246
		SHEET NO.	1 of 1	PART NO.	SS-B91APxx-x-S246

SIZE A4 | VER R8