

HDMI-19P-D07x-S273

鍍層厚度 :

Blank : 1u"
2 : 15u"
3 : 30u"

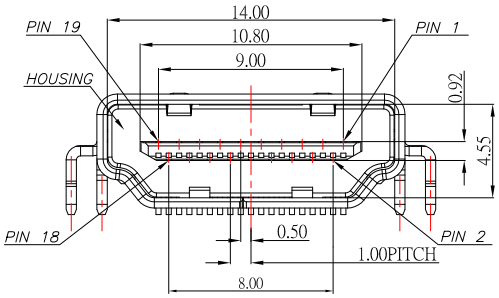

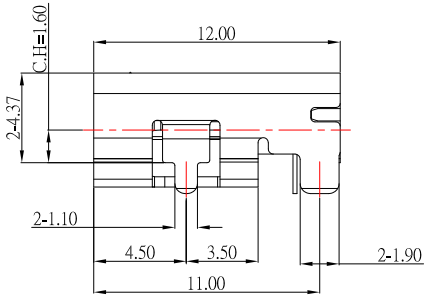

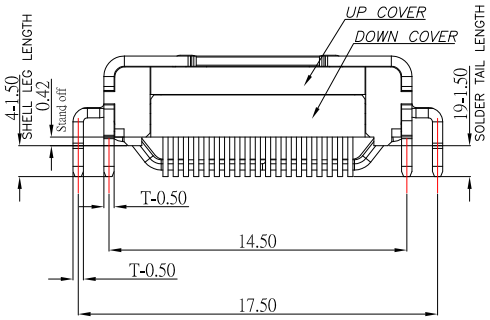

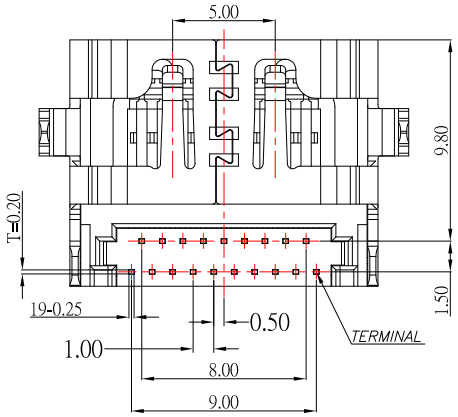

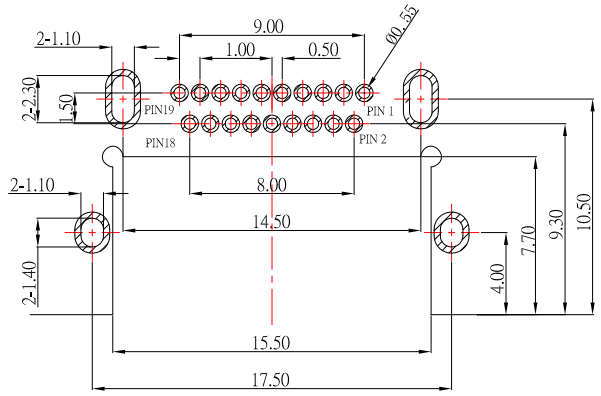

RECOMMENDED PCB LAYOUT(TOP VIEW)

Material:

1.Housing: LCP,UL 94V-0

2. Cover: LCP,UL 94V-0

3.Contact: Brass

4.Shell: Stainless Steel

Finish:

1.Contact: Plated Gold in Mating Area ;
Gold Plated on Solder Balls ;
Nickel under plated overall

2.Shell: Nickel under Plated surface layer

ITEM NO.	DESCRIPTION	DRAWN	DATE
1	刪除DATE CODE	Jack	111014

CONTACT 建倚科技股份有限公司
CONTACT TECHNOLOGY CORP.

TOLERANCE UNLESS OTHERWISE STATED : Up to 5 ±0.2; Above 5 ~ 15 ±0.3; Above 15 ~ 30 ±0.4; Above 30 ~ 50 ±0.5; Angle ±0.3°

3RD. ANGEL'S | UNITS | MM

DRAWN BY: Jack Lu	DATE 11/10/14	MAT'L	
CHECKED BY: Jacky Chen	DATE 11/10/14	FINISH	
APPROVED BY: Tony Kao	DATE 11/10/14	SCALE	1 : 1
		SHEET NO.	1 of 1

TITLE	CONNECTOR		
MODLE	HDMI A/F DIP 沉板 / 板上:4.37		
DWG NO.	HDMI-19P-D07x-S273	SIZE	A4
PART NO.	HDMI-19P-D07x-S273	VER	R1