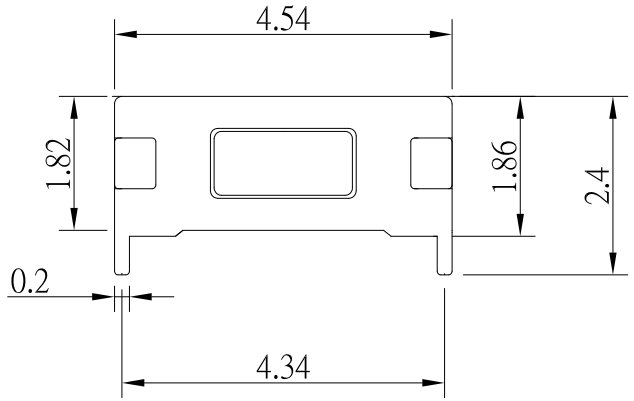

CIRCUIT DIAGRAM

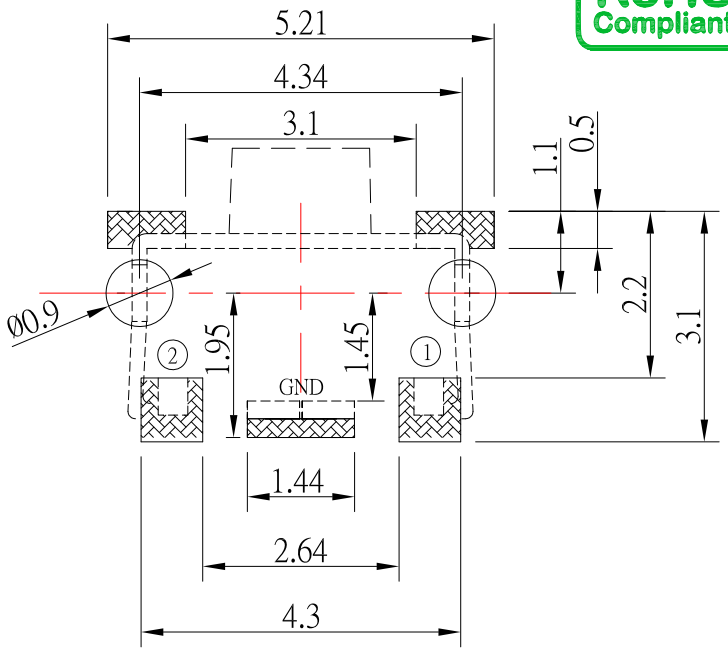

P.C.B. LAYOUT MOUNTING PATTERN

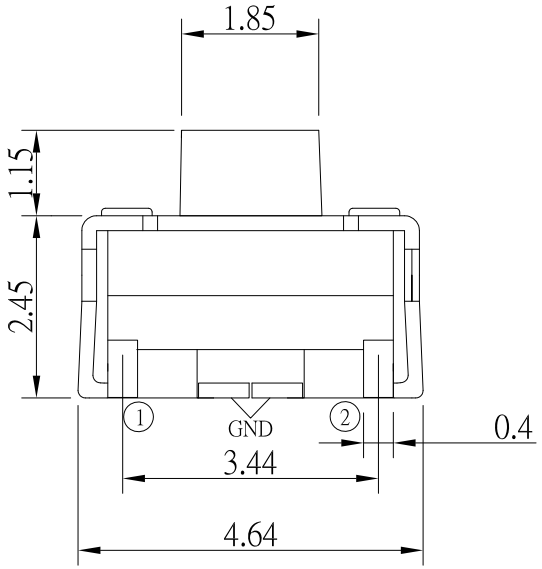

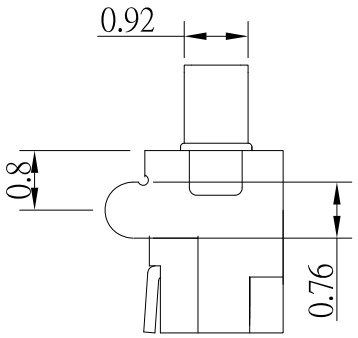

SPECIFICATIONS

Rating	DC 12V 50mA			
Contact Resistance	100mΩ Max.			
Insulation Resistance	50MΩ Min.			
Operating Force	2	150 ± 50gf	3	240 ± 50gf
Operating Life (cycles)	70,000		20,000	

ITEM NO.	DESCRIPTION	DRAWN	DATE
4	新增Operating Force選項	Jack	060315
3	更新電流值及Operating Force	Jack	031715
2	更新圖面位置及新增PIN標示	Jack	052014
1	更新爲A0版	Jack	020514

建倚科技股份有限公司
CONTACT TECHNOLOGY CORP.

TOLERANCE UNLESS OTHERWISE STATED : Up to 5 ±0.2; Above 5 ~ 15 ±0.3; Above 15 ~ 30 ±0.4; Above 30 ~ 50 ±0.5; Angle ±0.3°

3RD. ANGEL'S | UNITS MM

DRAWN BY: Jack Lu	DATE 06/03/15	MAT'L	
CHECKED BY: Jacky Chen	DATE 06/03/15	FINISH	
APPROVED BY: Tony Kao	DATE 06/03/15	SCALE 1 : 1	SHEET NO. 1 of 1

TITLE	SWITCH		
MODLE	TACT SWITCH		
DWG NO.	TS-A00AD-x-S246	SIZE	A4
PART NO.	TS-A00AD-x-S246	VER	A3