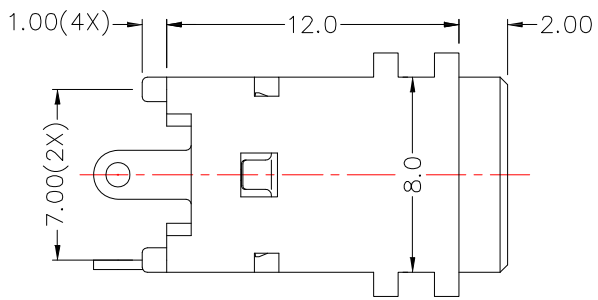

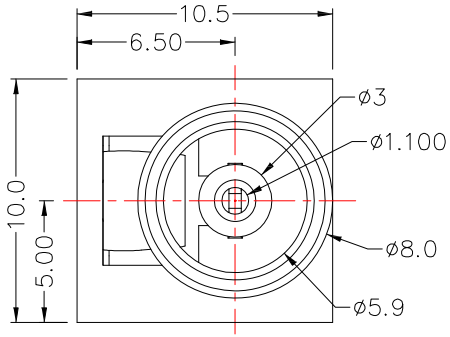

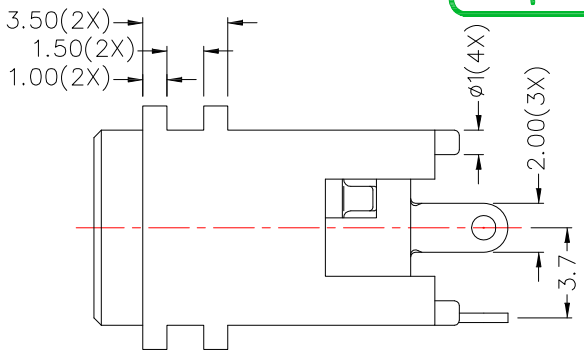

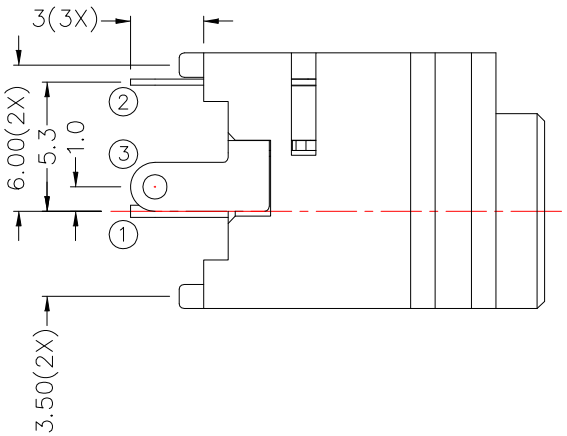

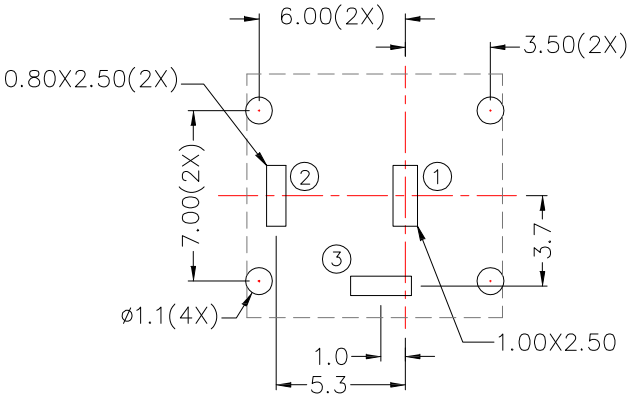

PCB LAYOUT
(TOP VIEW)

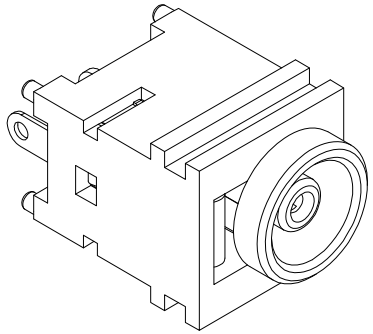

SPECIFICATION

1.Rating ：DC 24V 3.0A
2.Contact resistance：≤50mΩ
3.Insulation resistance：≥100MΩ
4.Withstand voltage：500VAC
5.Insertion and extraction force：3-30N
6.life test：5,000 cycles

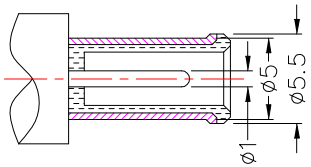

DC MATE PLUG

MODEL NO.	DC-092-1.0
SCHEMATIC	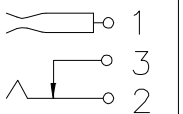

✳ MATERIAL

TERMINAL 1 ：BRASS(Matte Tin Plated)
TERMINAL 2 ：PHOSPHOR BRONZE(Matte Tin Plated)
TERMINAL 3 ：BRASS(Matte Tin Plated)
HOUSING ：PA66

ITEM NO.	DESCRIPTION	DRAWN	DATE
3	更新MODLE	Jack	120314
2	新增端子鍍層	Jack	111214
1	新增SPEC	Jack	081214

CONTACT 建倚科技股份有限公司
CONTACT TECHNOLOGY CORP.

TOLERANCE UNLESS OTHERWISE STATED : Up to 5 ±0.2; Above 5 ~ 15 ±0.3; Above 15 ~ 30 ±0.4; Above 30 ~ 50 ±0.5; Angle ±0.3°

3RD. ANGEL'S | UNITS MM

DRAWN BY: Jack Lu	DATE 12/03/14	MAT'L	
CHECKED BY: Jacky Chen	DATE 12/03/14	FINISH	
APPROVED BY: Tony Kao	DATE 12/03/14	SCALE 1 : 1	SHEET NO. 1 of 1

TITLE	JACK		
MODLE	DC JACK 端子鍍霧錫		
DWG NO.	DC-092-1.0-TN	SIZE	A4
PART NO.	DC-092-1.0-TN	VER	R3